OFFICIAL COPY - 01.17730.0038 - VDB004 - 1 - Approved(A) - - - 06-Jan-2010 06:03 PM

VENDOR DATA BOOK #2 INDEX

CDR CODE	DESCRIPTION	BOOK #
AC	General Arrangement Drawings	2
AD	Detail Drawings	2
AE	Hydraulic Diagrams	2
AJ	Instrument Schedule & Data Sheets	2
AK	Equipment Schedule & Data Sheets	2
AL	Cause & Effect/Logic Hook-up Diagrams	N/A
AN	As-built Weight / COG	See AC
AR	As-built Drawings	2
BA	Electric Schematics & Logic Diagrams	2
BB	Single-Line/Block/Interconnection Diagrams	2
BC	Cable Schedules	2
BF	Panel Lay-outs	2
BG	Internal Wiring Diagrams	See BB
BI	Terminal Arrangements	See BB
BM	Hazardous Area Equipment Certificates	2
BN	Hazardous Area Equipment List	2
CE	Lifting Equipment Test Certificates	N/A
CT	Factory Acceptance Test (FAT) Records	2
CU	Instrument Test & Calibration Certificates	2
CY	Commissioning Procedures	2
EC	Installation/Erection Field Handling Procedures	2
FB	Operating Manual	2
FC	Maintenance Manual	2
FE	List of Special Tools or Equipment	2
FF	Commissioning Spare Parts	2
FG	Operation Spare Parts	2
HA	COSHH Data Sheets & Certificates	2

OFFICIAL COPY - 01.17730.0038 - VDB004 - 1 - Approved(A) - - - 06-Jan-2010 06:03 PM

APPLETON MARINE, INC.

SBM OFFSHORE

FPSO P57

BR PETROBRAS NETHERLANDS B.V.

Project Title: FPSO P57

01.17730.0038	AC	002	03	X-G0520
P.O. Number	CDR Code	Sequence Number	Doc. Rev	Tag No.

Document Title: General Arrangement Drawing

Crane Serial Number: 15940

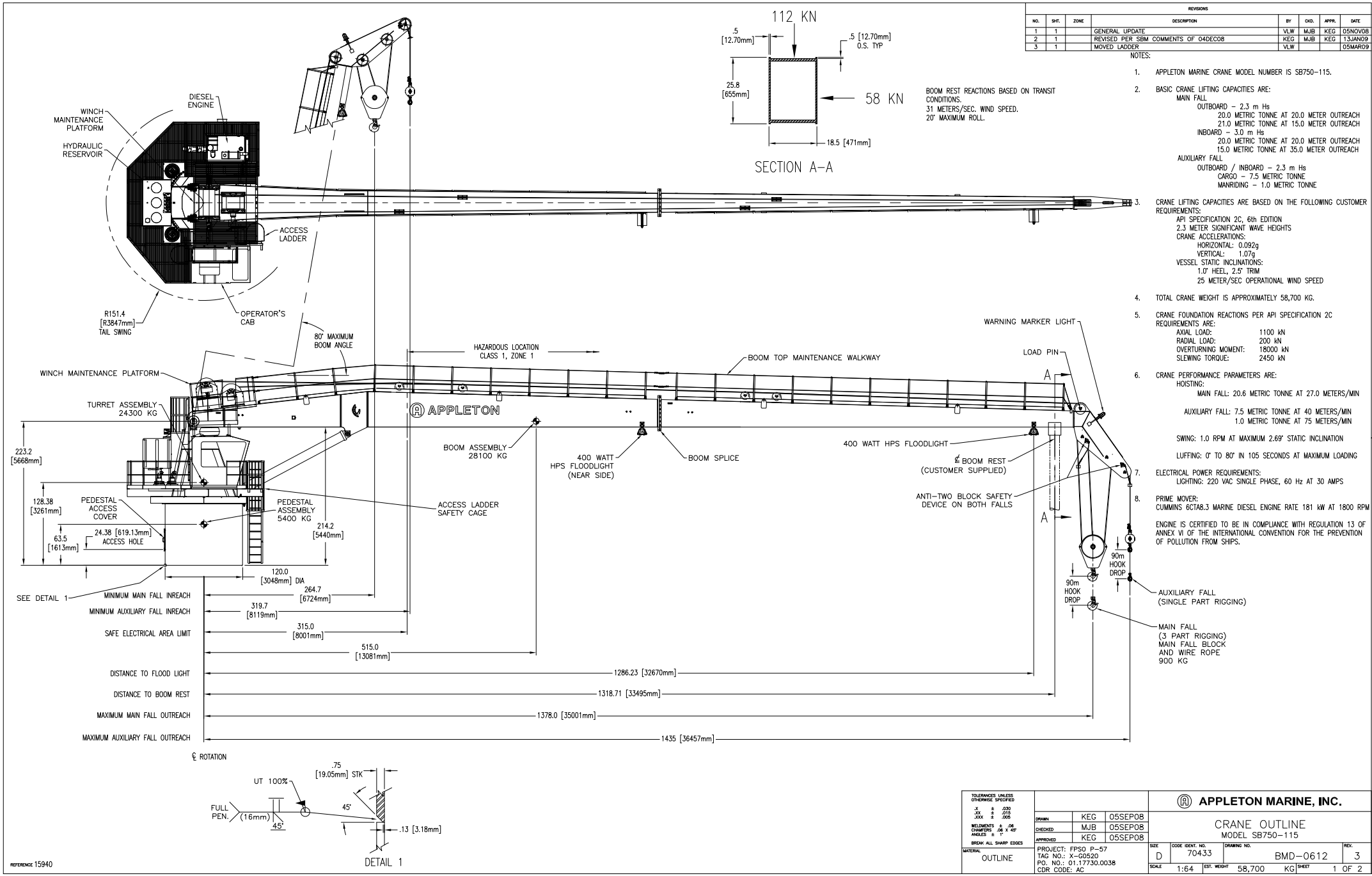

REVISIONS							
NO.	SHT.	ZONE	DESCRIPTION	BY	CKD.	APPR.	DATE
1	1		GENERAL UPDATE	VLW	MJB	KEG	05NOV08
2	1		REVISED PER SBM COMMENTS OF 04DEC08	KEG	MJB	KEG	13JAN09
3	1		MOVED LADDER	VLW			05MAR09

NOTES:

1. APPLETON MARINE CRANE MODEL NUMBER IS SB750-115.
2. BASIC CRANE LIFTING CAPACITIES ARE:
   MAIN FALL
   OUTBOARD - 2.3 m Hs
   20.0 METRIC TONNE AT 20.0 METER OUTREACH
   21.0 METRIC TONNE AT 15.0 METER OUTREACH
   INBOARD - 3.0 m Hs
   20.0 METRIC TONNE AT 20.0 METER OUTREACH
   15.0 METRIC TONNE AT 35.0 METER OUTREACH
   AUXILIARY FALL
   OUTBOARD / INBOARD - 2.3 m Hs
   CARGO - 7.5 METRIC TONNE
   MANRIDING - 1.0 METRIC TONNE
3. CRANE LIFTING CAPACITIES ARE BASED ON THE FOLLOWING CUSTOMER REQUIREMENTS:
   API SPECIFICATION 2C, 6th EDITION
   2.3 METER SIGNIFICANT WAVE HEIGHTS
   CRANE ACCELERATIONS:
   HORIZONTAL: 0.092g
   VERTICAL: 1.07g
   VESSEL STATIC INCLINATIONS:
   1.0° HEEL, 2.5° TRIM
   25 METER/SEC OPERATIONAL WIND SPEED
4. TOTAL CRANE WEIGHT IS APPROXIMATELY 58,700 KG.
5. CRANE FOUNDATION REACTIONS PER API SPECIFICATION 2C REQUIREMENTS ARE:
   AXIAL LOAD: 1100 kN
   RADIAL LOAD: 200 kN
   OVERTURNING MOMENT: 18000 kN
   SLEWING TORQUE: 2450 kN
6. CRANE PERFORMANCE PARAMETERS ARE:
   HOISTING:
   MAIN FALL: 20.6 METRIC TONNE AT 27.0 METERS/MIN
   AUXILIARY FALL: 7.5 METRIC TONNE AT 40 METERS/MIN
   1.0 METRIC TONNE AT 75 METERS/MIN
   SWING: 1.0 RPM AT MAXIMUM 2.69° STATIC INCLINATION
   LUFFING: 0° TO 80° IN 105 SECONDS AT MAXIMUM LOADING
7. ELECTRICAL POWER REQUIREMENTS:
   LIGHTING: 220 VAC SINGLE PHASE, 60 Hz AT 30 AMPS
8. PRIME MOVER:
   CUMMINS 6CTA8.3 MARINE DIESEL ENGINE RATE 181 kW AT 1800 RPM

   ENGINE IS CERTIFIED TO BE IN COMPLIANCE WITH REGULATION 13 OF ANNEX VI OF THE INTERNATIONAL CONVENTION FOR THE PREVENTION OF POLLUTION FROM SHIPS.

TOLERANCES UNLESS OTHERWISE SPECIFIED
.X ± .030
.XX ± .015
.XXX ± .005
WELDMENTS ± .06
CHAMFERS .06 X 45°
ANGLES ± 1°
BREAK ALL SHARP EDGES
MATERIAL
OUTLINE

DRAWN	KEG	05SEP08
CHECKED	MJB	05SEP08
APPROVED	KEG	05SEP08

PROJECT: FPSO P-57
TAG NO.: X-G0520
PO. NO.: 01.17730.0038
CDR CODE: AC

APPLETON MARINE, INC.

CRANE OUTLINE
MODEL SB750-115

SIZE	CODE IDENT. NO.	DRAWING NO.	REV.
D	70433	BMD-0612	3

SCALE 1:64 EST. WEIGHT 58,700 KG SHEET 1 OF 2

OFFICIAL COPY - 01.17730.0038 - VDB004 - 1 - Approved(A) - - - 06-Jan-2010 06:03 PM E

OFFICIAL COPY - 01.17730.0038 - VDB004 - 1 - Approved(A) - - - 06-Jan-2010 06:03 PM

REVISIONS							
NO.	SHT.	ZONE	DESCRIPTION	BY	CKD.	APPR.	DATE
1	2		GENERAL UPDATE	VLW	MJB	KEG	05NOV08
2	2		REVISED PER SBM COMMENTS OF 04DEC08	KEG	MJB	KEG	13JAN09
3	2		ADDED SECTION B-B, UPDATED JUNCTION BOX DETAIL	VLW			05MAR09

FPSO CONNECTION

MAIN POWER 220 VAC, 1-PHASE @ 30 AMPS	L1, L2
GROUND	GND
CRANE CONFIRMINED GAS - 24VDC CABLE TAG: T53-SXA-652/B	S100, S101
CRANE CONFIRMED FIRE - 24VDC CABLE TAG: T53-SXA-652/A	S102, S103
110VAC FPSO AUDIBLE ALARM	S104, S105
220VAC FPSO VISUAL ALARM	S106, S107
MANUAL ALARM CALL POINT CABLE TAG: T53-MAC-651	3L, 4L

JUNCTION BOX (JB01) DETAIL

S.O. 15940 LOAD CAPACITY CHART

SIGNIFICANT WAVE HEIGHT		INBOARD LIFTING 3.0m		OUTBOARD LIFTING 2.3m	
RADIUS METERS	ϕ DEG	SWL MT	C_V	SWL MT	C_V
6.25	80	20.0	1.45	21.0	1.53
8.00	77.21	20.0	1.45	21.0	1.53
10.00	73.86	20.0	1.45	21.0	1.53
12.00	70.44	20.0	1.45	21.0	1.53
14.00	66.94	20.0	1.45	21.0	1.53
16.00	63.35	20.0	1.45	21.0	1.53
18.00	59.63	20.0	1.45	21.0	1.53
20.00	55.76	20.0	1.45	20.0	1.54
22.00	51.69	20.0	1.45	17.9	1.57
24.00	47.38	20.0	1.45	16.1	1.61
26.00	42.73	20.0	1.45	14.6	1.64
28.00	37.61	20.0	1.45	13.3	1.67
30.00	31.78	19.0	1.45	12.2	1.70
32.00	24.72	17.5	1.45	11.3	1.72
34.00	14.64	16.0	1.45	10.4	1.75
35.00	0.00	15.0	1.45	10.0	1.77

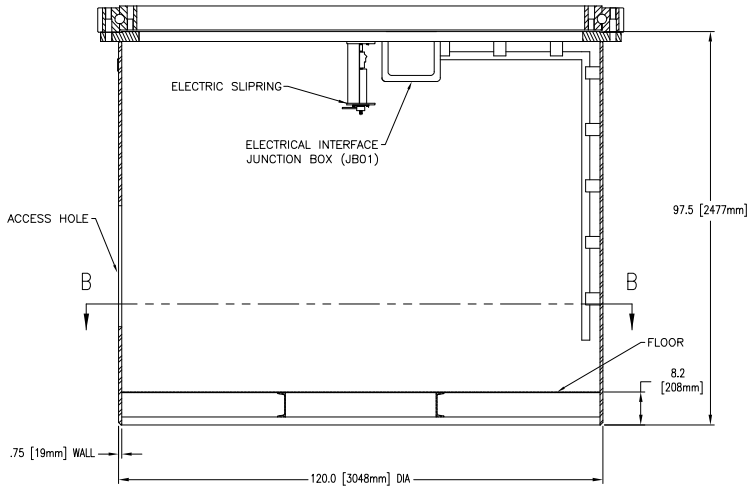

PEDESATL DETAIL

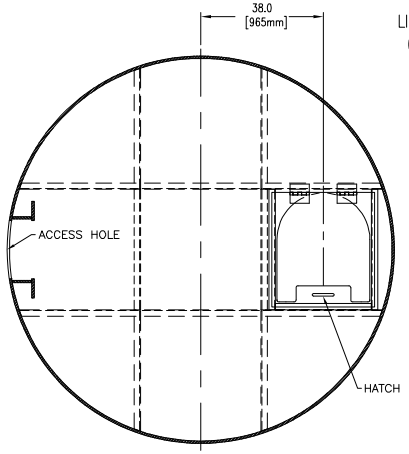

SECTION B-B
SCALE: 1:20

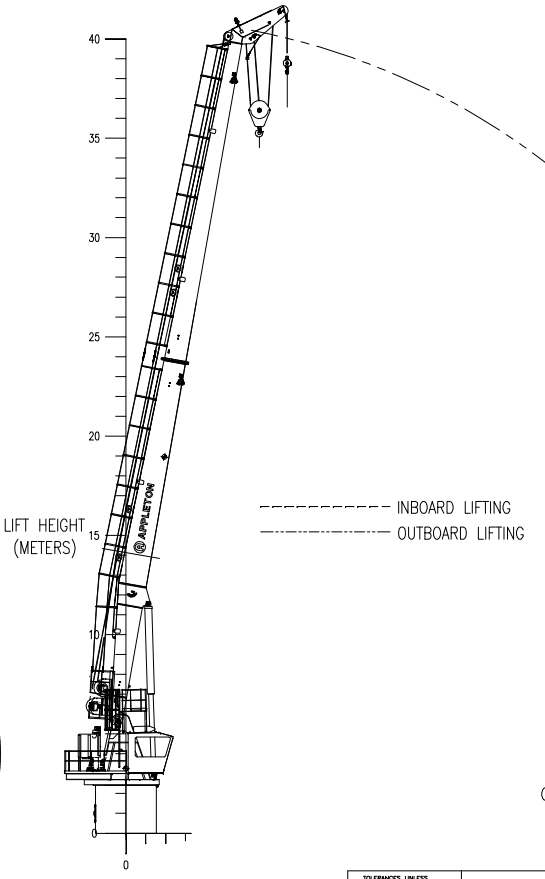

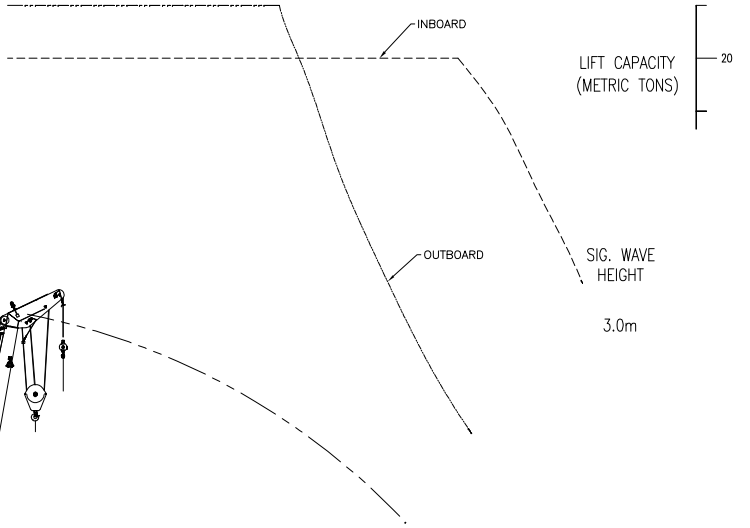

REFERENCE 15940

TOLERANCES UNLESS OTHERWISE SPECIFIED .X ± .030, .XX ± .015, .XXX ± .005; WELDMENTS ± .06, CHAMFERS .06 X 45°, ANGLES ± 1°; BREAK ALL SHARP EDGES		
MATERIAL: OUTLINE	DRAWN: KEG 05SEP08; CHECKED: MJB 05SEP08; APPROVED: KEG 05SEP08	APPLETON MARINE, INC.
	PROJECT: FPSO P-57; TAG NO.: X-G0520; PO. NO.: 01.17730.0038; CDR CODE: AC	CRANE OUTLINE MODEL SB750-115
		SIZE D; CODE IDENT. NO. 70433; DRAWING NO. BMD-0612; REV. 3
		SCALE 1:64; EST. WEIGHT 58,700 KG; SHEET 2 OF 2

8 | 7 | 6 | 5 | 4 | 3 | 2 | 1

OFFICIAL COPY - 01.17730.0038 - VDB004 - 1 - Approved(A) - - - 06-Jan-2010 06:03 PM

APPLETON MARINE, INC.

SBM OFFSHORE

FPSO P57

BR PETROBRAS NETHERLANDS B.V.

Project Title: FPSO P57

01.17730.0038	AD	002	0	X-G0520
P.O. Number	CDR Code	Sequence Number	Doc. Rev	Tag No.

Document Title: Detail Drawings

Crane Serial Number: 15940

Pedestal Fabrication – DMD-3351

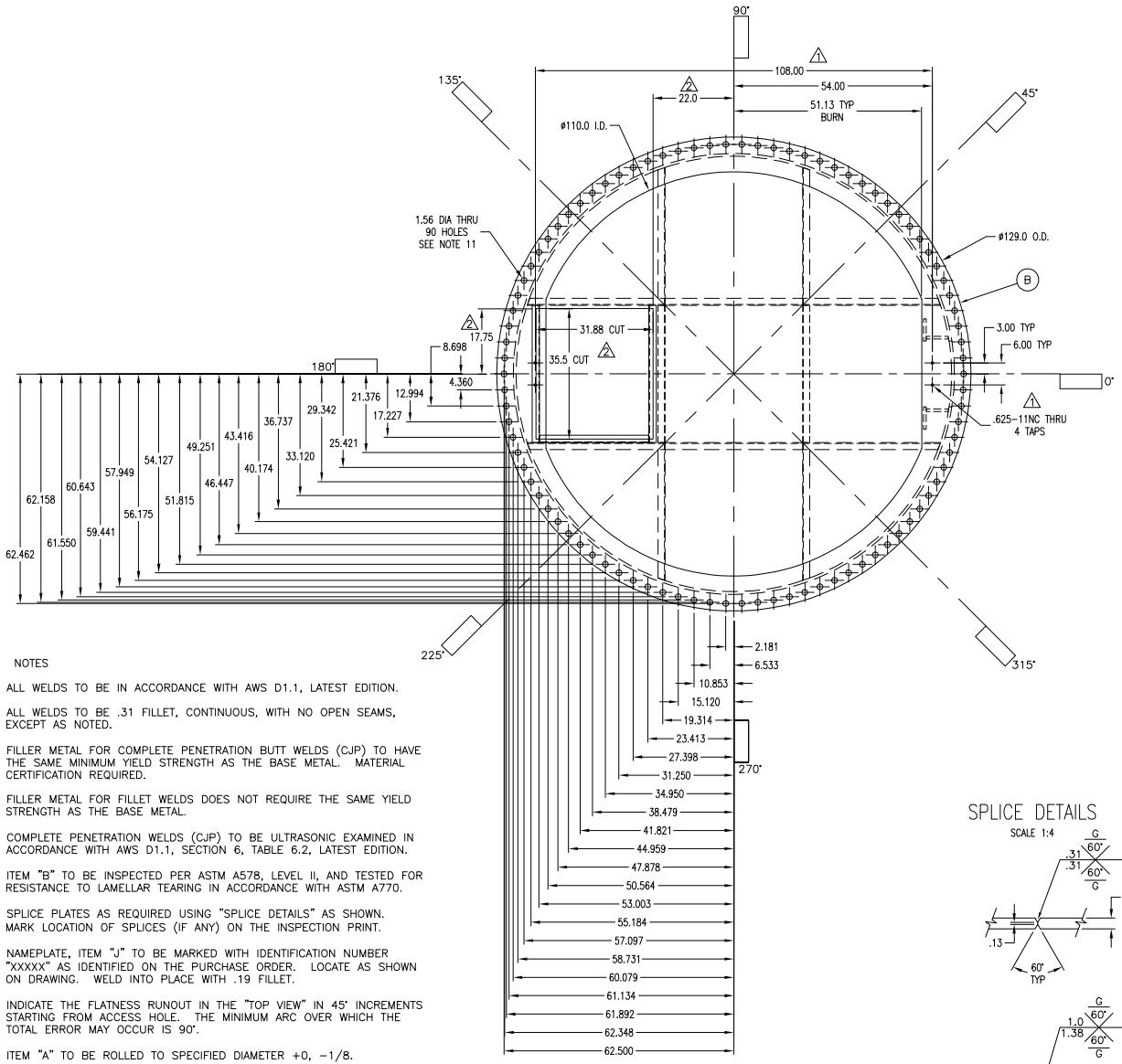

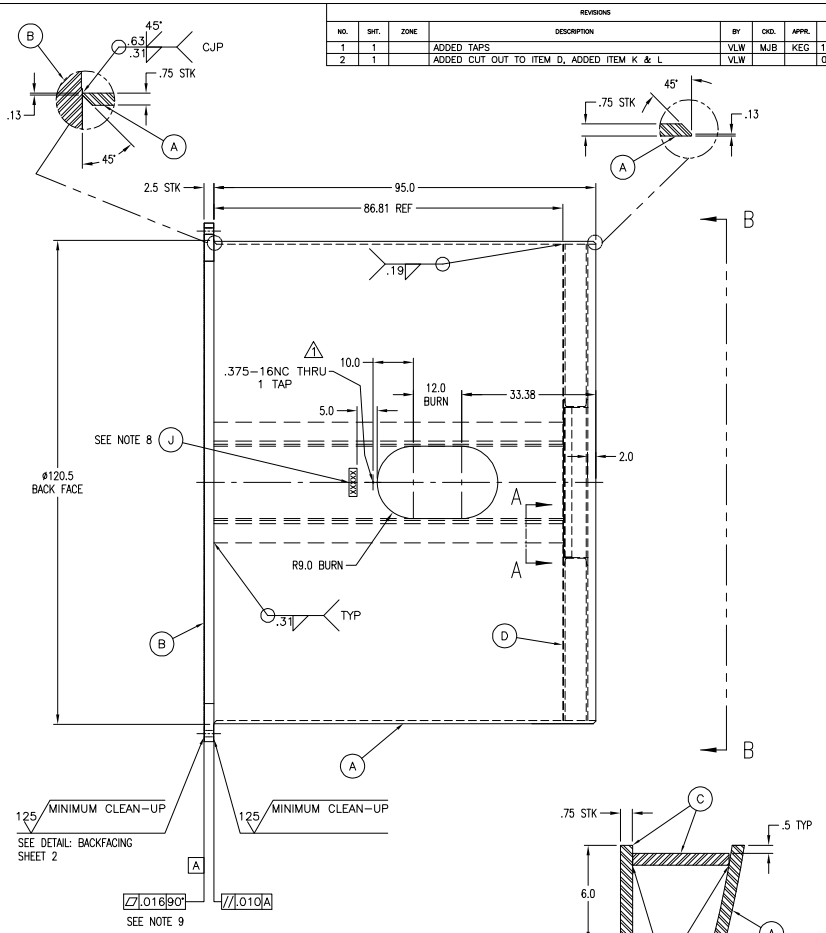

SECTION A–A
SCALE 1:4

SPLICE DETAILS
SCALE 1:4

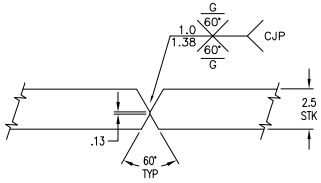

NOTES

1. ALL WELDS TO BE IN ACCORDANCE WITH AWS D1.1, LATEST EDITION.
2. ALL WELDS TO BE .31 FILLET, CONTINUOUS, WITH NO OPEN SEAMS, EXCEPT AS NOTED.
3. FILLER METAL FOR COMPLETE PENETRATION BUTT WELDS (CJP) TO HAVE THE SAME MINIMUM YIELD STRENGTH AS THE BASE METAL. MATERIAL CERTIFICATION REQUIRED.
4. FILLER METAL FOR FILLET WELDS DOES NOT REQUIRE THE SAME YIELD STRENGTH AS THE BASE METAL.
5. COMPLETE PENETRATION WELDS (CJP) TO BE ULTRASONIC EXAMINED IN ACCORDANCE WITH AWS D1.1, SECTION 6, TABLE 6.2, LATEST EDITION.
6. ITEM "B" TO BE INSPECTED PER ASTM A578, LEVEL II, AND TESTED FOR RESISTANCE TO LAMELLAR TEARING IN ACCORDANCE WITH ASTM A770.
7. SPLICE PLATES AS REQUIRED USING "SPLICE DETAILS" AS SHOWN. MARK LOCATION OF SPLICES (IF ANY) ON THE INSPECTION PRINT.
8. NAMEPLATE, ITEM "J" TO BE MARKED WITH IDENTIFICATION NUMBER "XXXXX" AS IDENTIFIED ON THE PURCHASE ORDER. LOCATE AS SHOWN ON DRAWING. WELD INTO PLACE WITH .19 FILLET.
9. INDICATE THE FLATNESS RUNOUT IN THE "TOP VIEW" IN 45° INCREMENTS STARTING FROM ACCESS HOLE. THE MINIMUM ARC OVER WHICH THE TOTAL ERROR MAY OCCUR IS 90°.
10. ITEM "A" TO BE ROLLED TO SPECIFIED DIAMETER +0, −1/8.
11. BOLT CIRCLE ON TOP FLANGE TO BE CONCENTRIC WITH OUTSIDE DIAMETER OF ITEM "A".
12. ITEM "D" TO BE MADE OF "INLAND 4–WAY PLATE – MEDIUM PATTERN". PATTERN TO BE ON INSIDE OF PEDESTAL.
13. PAINT PER SHOP ORDER PAINT SPECIFICATION.

REFERENCE 15940

REVISIONS

NO.	SHT.	ZONE	DESCRIPTION	BY	CKD.	APPR.	DATE
1	1		ADDED TAPS	VLW	MJB	KEG	12DEC08
2	1		ADDED CUT OUT TO ITEM D, ADDED ITEM K & L	VLW			09FEB09

ITEM	QTY	DESCRIPTION	MATERIAL	CHARPY V-NOTCH	HEAT RUN
L	2	ANGLE: 2.0 X 2.0 X .19 X 37.38 LG	ASTM A36	–	
K	1	ANGLE: 2.0 X 2.0 X .19 X 29.75 LG	ASTM A36	–	
J	1	.38 X 2.0 X 7.0 LG	ASTM A36	–	
H	2	CHANNEL: C6 X 8.2 X 112.44 LG	ASTM A36	–	
G	2	CHANNEL: C6 X 8.2 X 37.38 LG	ASTM A36	–	
F	2	CHANNEL: C6 X 8.2 X 37.31 LG	ASTM A36	–	
E	2	CHANNEL: C6 X 8.2 X 37.31 LG	ASTM A36	–	
D	1	.19 X 118.5 O.D.	ASTM A786	–	
C	4	.75 X 6.0 X 86.81 LG	ASTM A572 GR 50	25 FT–LBS @ 32°F	
B	1	2.5 X 129.0 DIA	ASTM A527 GR 50	25 FT–LBS @ 32°F	
A	1	120.0 DIA X .75 WALL X 95.0 LG	ASTM A572 GR 50	25 FT–LBS @ 32°F	

TOLERANCES UNLESS OTHERWISE SPECIFIED
X ± .030
.XX ± .015
.XXX ± .005
WELDMENTS ± .06
CHAMFERS .06 X 45°
ANGLES ± 1°
BREAK ALL SHARP EDGES

MATERIAL: WELDMENT

DRAWN	VLW	04NOV08
CHECKED	MJB	05NOV08
APPROVED	KEG	05NOV08

APPLETON MARINE, INC.

PEDESTAL

SIZE	CODE IDENT. NO.	DRAWING NO.	REV.
D	70433	DMD–3351	2

SCALE 1:16 | EST. WEIGHT 11,950 LBS | SHEET 1 OF 2

OFFICIAL COPY - 01.17730.0038 - VDB004 - 1 - Approved(A) - - - 06-Jan-2010 06:03 PM

OFFICIAL COPY - 01.17730.0038 - VDB004 - 1 - Approved(A) - - - 06-Jan-2010 06:03 PM

REVISIONS							
NO.	SHT.	ZONE	DESCRIPTION	BY	CKD.	APPR.	DATE
1	2		NO CHANGES THIS SHEET	VLW	MJB	KEG	12DEC08
2	2		ADDED ITEM K & L, SECTION D-D	VLW			09FEB09

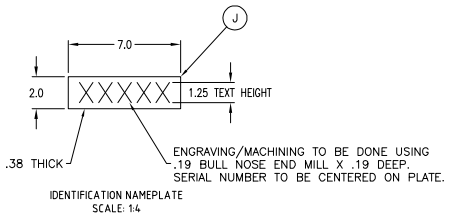

IDENTIFICATION NAMEPLATE
SCALE: 1:4

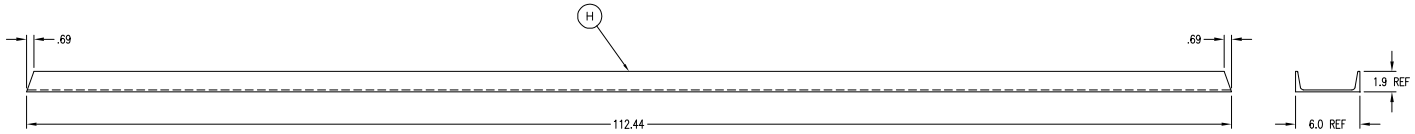

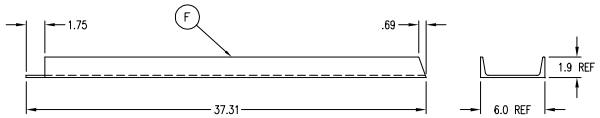

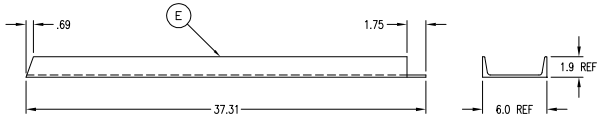

SCALE: 1:6

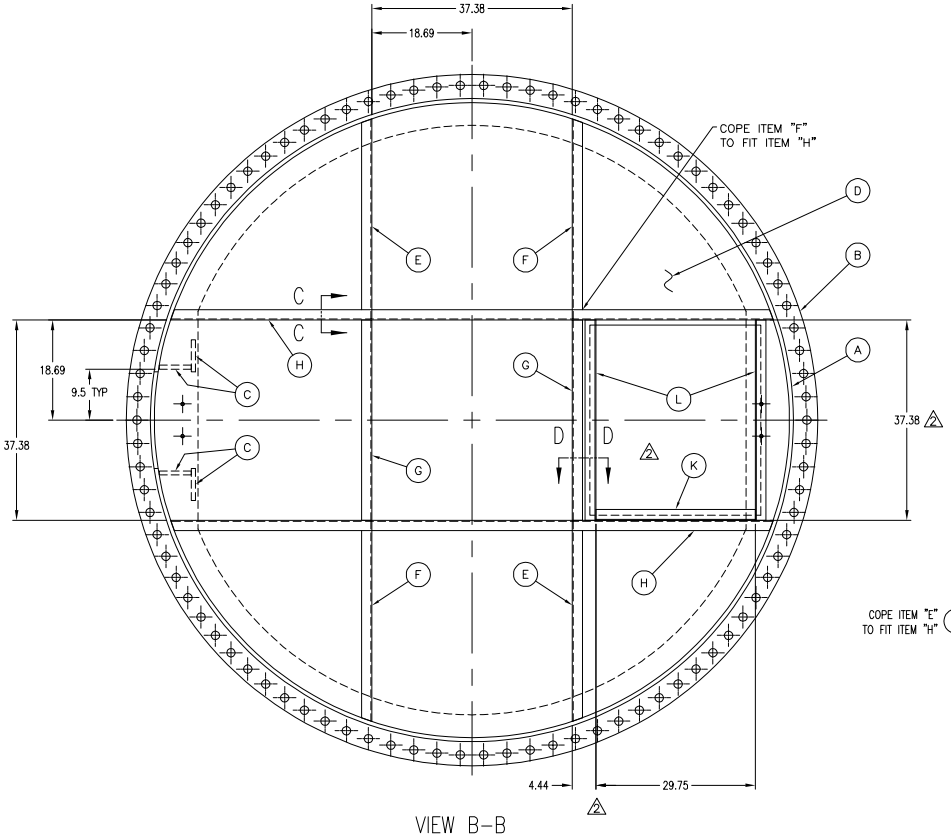

VIEW B-B

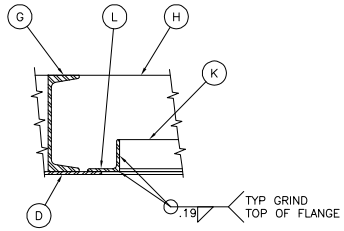

SECTION D-D
SCALE: 1:4

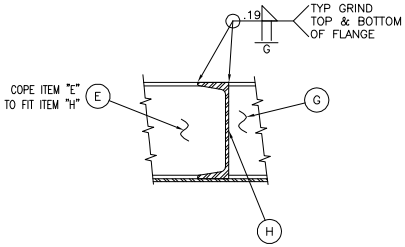

SECTION C-C
SCALE: 1:4

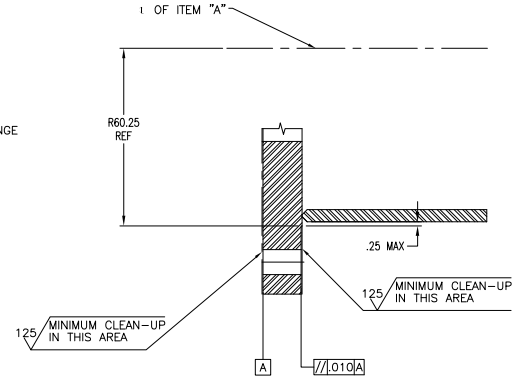

DETAIL: BACKFACING
SCALE: 1:4

REFERENCE 15940

TOLERANCES UNLESS OTHERWISE SPECIFIED				APPLETON MARINE, INC.			
.X ± .030 .XX ± .015 .XXX ± .005 WELDMENTS ± .06 CHAMFERS .06 X 45° ANGLES ± 1° BREAK ALL SHARP EDGES				PEDESTAL			
MATERIAL: WELDMENT	DRAWN	VLW	30OCT08	SIZE: D	CODE IDENT. NO.: 70433	DRAWING NO.: DMD-3351	REV.: 2
	CHECKED	MJB	05NOV08	SCALE: 1:12	EST. WEIGHT: 11,950 LBS	SHEET: 2 OF 2	
	APPROVED	KEG	05NOV08				

OFFICIAL COPY - 01.17730.0038 - VDB004 - 1 - Approved(A) - - - 06-Jan-2010 06:03 PM

APPLETON MARINE, INC.

SBM OFFSHORE

FPSO P57

BR PETROBRAS NETHERLANDS B.V.

Project Title: FPSO P57

01.17730.0038	AE	002	01	X-G0520
P.O. Number	CDR Code	Sequence Number	Doc. Rev	Tag No.

Document Title: Hydraulic Schematic

Crane Serial Number: 15940

OFFICIAL COPY - 01.17730.0038 - VDB004 - 1 - Approved(A) - - - 06-Jan-2010 06:03 PM

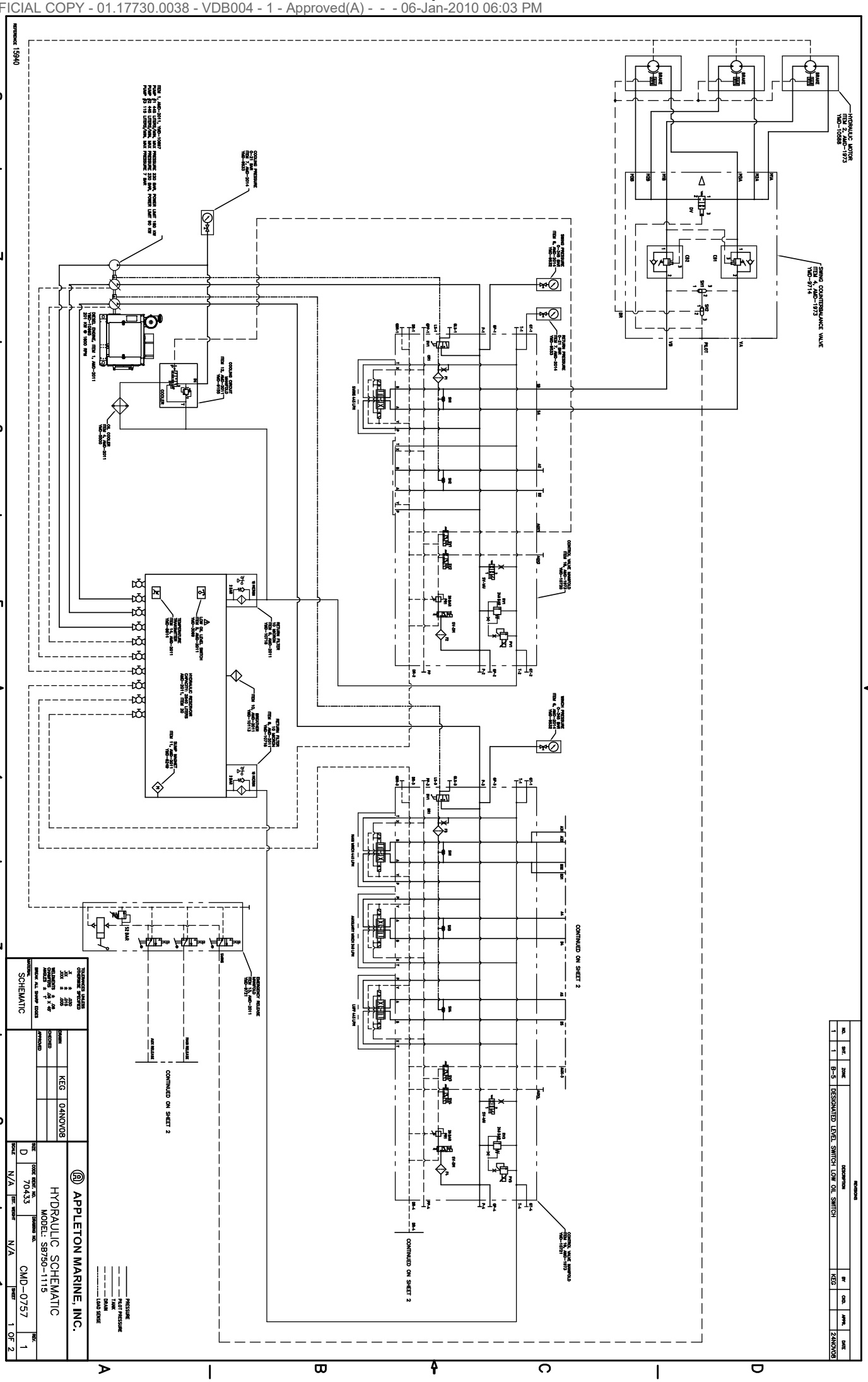

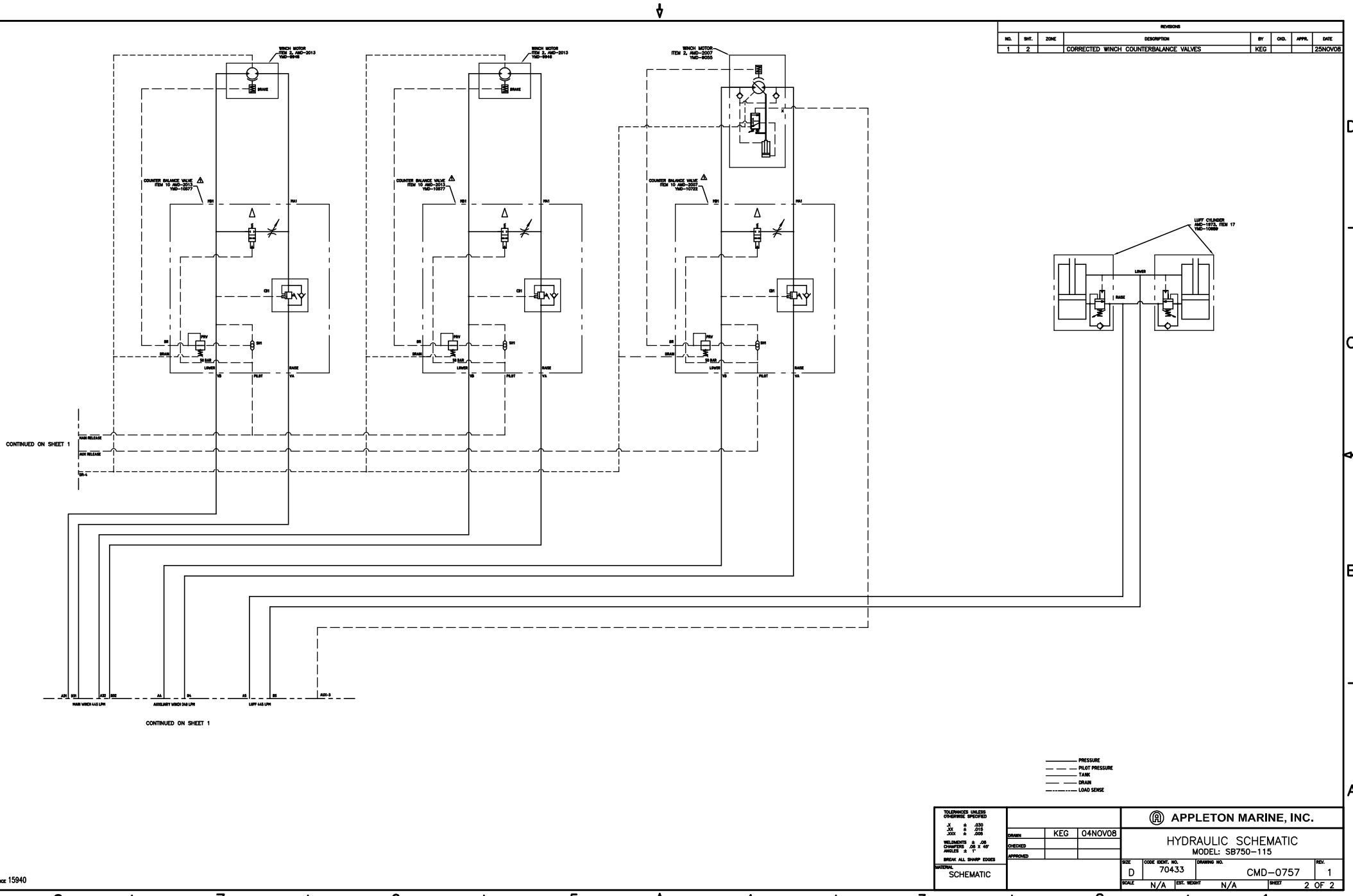

OFFICIAL COPY - 01.17730.0038 - VDB004 - 1 - Approved(A) - - - 06-Jan-2010 06:03 PM

OFFICIAL COPY - 01.17730.0038 - VDB004 - 1 - Approved(A) - - - 06-Jan-2010 06:03 PM

APPLETON MARINE, INC.

SBM OFFSHORE

FPSO P57

BR PETROBRAS NETHERLANDS B.V.

Project Title: FPSO P57

01.17730.0038	AJ	002	02	X-G0520
P.O. Number	CDR Code	Sequence Number	Doc. Rev	Tag No.

Document Title: Instrument Schedule and Data Sheets

Crane Serial Number: 15940

APPLETON MARINE P/N:	DESCRIPTION
YMD-8614	Temperature Transmitter
YMD-3069	Level Switch
YMD-8948	Angle Sensor
NMD-1390	Load Pin, Main Fall
NMD-1391	Load Pin, Aux Fall
YMD-8734	Rotary Encoder
YMD-9797	Gas Detector
YMD-9798	Flame Detector
YMD-9799	Smoke Detector
YMD-10229	Pushbutton Call Point

OFFICIAL COPY - 01.17730.0038 - VDB004 - 1 - Approved(A) - - - 06-Jan-2010 06:03 PM

REVISIONS						
NO.	SHT.	DESCRIPTION	DRN.	CKD.	APP.	DATE
1	1	ADDED MUELLER PART NUMBERS	SRT	SBN	CEB	29APR04
2	1	DELETED OLD PART NUMBERS THAT ARE NO LONGER AVAILABLE	CEB			

ELECTRONIC TEMPERATURE TRANSMITTER

TEMPERATURE TRANSMITTER
- MUELLER P/N: R5BJL-KW04A-56-Q9
  - SCREW COVER, WHITE POLOYPROPYLENE
  - PLATIMUM 100Ω SINGLE ELEMENT
  - RTD TEMPERATURE RANGE: -58 TO 392 DEG F
  - SHEATH DIAMETER: 0.25"
  - SHEATH MATERIAL: 316 SST
  - SHEATH LENGTH: 4"
  - TRANSMITTER RANGE: 0 - 200 DEG. F (4 - 20 mA)

THERMOWELL
- MUELLER P/N: R02-7-025-W
  - NON LAGGING
  - 0.260" BORE
  - 3/4" NPT PROCESS CONNECTION
  - 2.5" INSERTION LENGTH
  - WELL MATERIAL: 316 SST

See YMD-9881 for 1/2" NPT Thermowell process connection.

SUGGESTED VENDOR:
MUELLER SALES CORPORATION

DRAWN	CEB	16NOV00
CHECKED	SBN	04DEC00
APPROVED	CEB	04DEC00

MATERIAL
COMMERCIAL

S.O. NUMBER 12332

APPLETON MARINE, INC.

TEMPERATURE TRANSMITTER

SIZE	CODE ID. NO.	DRAWING NO.	REV.
A	70433	YMD-8614	2

EST. WEIGHT 5 LBS SHEET 1 OF 1

OFFICIAL COPY - 01.17730.0038 - VDB004 - 1 - Approved(A) - - - 06-Jan-2010 06:03 PM

Q9
Basic Programmable 2-wire In-head Transmitters

Actual size

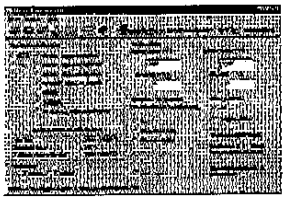

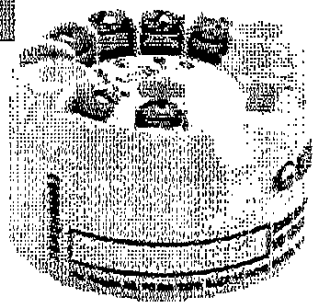

Basic Programmable 2-wire Transmitter for RTD and T/C

The Q9 is a basic, non-isolated, easy-to-use 2-wire transmitter for in-head mounting in DIN B and similar heads.

Configuration is made in seconds with the user friendly Windows software, Q9 Soft. No external power is needed.

The Q9 is programmable for RTD's in 3- and 4-wire connection according to different standards as well as for 11 T/C types.

Useful error correction functions improve the accuracy.

- **Measurements with RTD's in 3- and 4-wire connection**
  The Q9 accepts inputs from a number of standardized RTD's such as Pt100, Pt500 and Pt1000 acc. to IEC 60751 (α=0.00385), Pt100 acc. to JIS C 1604 (α=0.003916) and US standards (α=0.003902) as well as Ni100 and Ni1000 acc. to DIN 43760. 3- and 4-wire connection can be selected.
- **Measurements with thermocouples**
  The Q9 accepts inputs from 11 types of standardized thermocouples.
  For T/C input, the CJC (Cold Junction Compensation) is fully automatic, by means of an accurate measurement of the terminal temperature Alternatively, the CJC can be disabled
- **Temperature linear output**
  Fully temperature linear 4-20 mA output for RTD's and thermocouples.
- **Sensor matching and error corrections for maximum accuracy**
  A matching to a calibrated temperature sensor can easily be performed with the *Sensor Error Correction* function. The *System Error Correction* is a convenient way to adjust the sensor/transmitter combination (or just the transmitter) for highest accuracy in a certain measuring range.
- **NAMUR compliant**
  Output limitations and fail currents according to NAMUR recommendations.
- **Designed for harsh conditions**
  Rugged design tested for 5 g vibrations.
- **Mounting and wiring**
  The Q9 is designed to fit inside connection heads type DIN B or larger. The large center hole, dia. 7mm / 0.28 inch, and the robust terminals greatly simplify the mounting and wiring procedure.
- **Configuration without external power**
  Edit or read the configuration off-line by just connecting a PC.
- **Q9 Soft, easy-to-use Windows configuration software**
  The simple and user friendly software, Q9 Soft, is used for transmitter configuration in seconds. In one window all parameters are set, such as sensor type, measuring range, filter activation, CJC, sensor failure action, error corrections etc.

OFFICIAL COPY - 01.17730.0038 - VDB004 - 1 - Approved(A) - - - 06-Jan-2010 06:03 PM

Specifications: Q9

Input RTD's		
Pt100 (IEC60751, α = 0.00385)	3-, 4-wire connection	-200 to +1000 °C / -328 to +1832 °F
Pt 100 (JIS1604, α = 0.003916)	3-, 4-wire connection	-200 to +1000 °C / -328 to +1832 °F
Pt 100 (US, α = 0.003902)	3-, 4-wire connection	-200 to +1000 °C / -328 to +1832 °F
Pt1000 (IEC60751, α = 0.00385)	3-, 4-wire connection	-200 to +200 °C / -328 to +392 °F
Ni100 (DIN 43760)	3-, 4-wire connection	-60 to +250 °C / -76 to +482 °F
Ni1000 (DIN 43760)	3-, 4-wire connection	-100 to +150 °C / -148 to +302 °F
PtX (IEC60751, α = 0.00385)	3-, 4-wire connection	Any Pt function between Pt10- Pt1000
Sensor current		~ 0.4 mA
Maximum sensor wire resistance		25 Ω/wire
Input Thermocouples		
Range	Type: AE, B, E, J, K, L, N, R, S, T, U	Acc. to T/C standards
Maximum sensor wire resistance		500 Ω (total loop)
Monitoring		
Sensor failure monitoring		Upscale or downscale action
Adjustments		
Zero adjustment	All inputs	Any value within range limits
Minimum spans	Pt100	10 °C / 18 °F
	T/C	2 mV
Output		
Analog		4-20 mA, temperature linear
Resolution		5 µA
Minimum output signal	Measurement/Failure	3.8 mA / 3.5 mA
Maximum output signal	Measurement/Failure	20.5 mA / 21.6 mA
Permissible load, see load diagram		725 Ω @ 24 VDC, 22 mA
Temperature		
Ambient, storage and operation		-40 to +85 °C / -40 to +185 °F
General data		
Selectable dampening time		~ 2 s
Update time		~ 1.5 s
Isolation In - Out		Non-isolated
Humidity		0 to 100 %RH
Power supply, polarity protected		
Supply voltage		8 to 36 VDC 2-wire
Permissible ripple		4 V p-p @ 50/60 Hz
Accuracy		
Linearity	RTD	±0.1 % [1]
	T/C	±0.2 % [1]
Calibration	RTD	Max. of ±0.2 °C/ ±0.4 °F or ±0.1 % [1]
	T/C	Max. of ±20 µV or ±0.1 % [1]
Cold Junction Compensation (CJC)	T/C	±0.5 °C / ±0.9 °F
Temperature influence [2]	All inputs	Max. of ±0.25 °C/25 °C or ±0.25%/25 °C [1] [2]
		Max. of ±0.5 °F/50 °F or ±0.28%/50 °F [1] [2]
Temperature influence CJC [2]	T/C	±0.5 °C/25 °C / ±1.0 °F/50 °F
RFI influence, 0.15 to 1000 MHz, 10 V or V/m		±0.5% [1] (typical)
Long-term stability		±0.2 % [1] /year
Housing		
Material, Flammability (UL)		PC/ABS, V0
Mounting		DIN B-head or larger, DIN rail (with mounting kit)
Connection	Single/stranded wires	Max. 1.5 mm², AWG 16
Weight		50 g
Protection, housing / terminals		IP 54 / IP 00

Thermocouple

[1] Of input span
[2] Reference temperature 23 °C / 73 °F
[3] If zero-deflection > 100% of input span: add 0.125% of input span/25 °C or 0.14% of input span/50 °F per 100% zero-deflection

Input connections

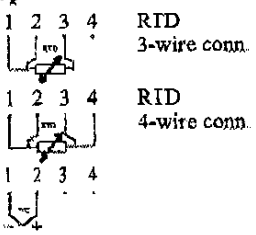

Output load diagram

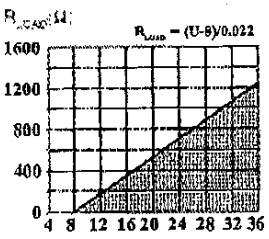

Dimensions

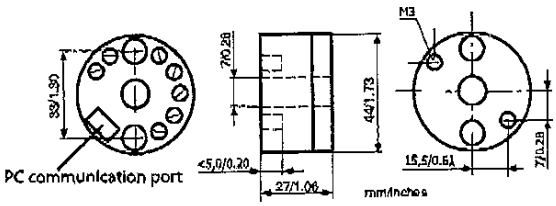

Output connections

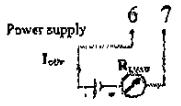

OFFICIAL COPY - 01.17730.0038 - VDB004 - 1 - Approved(A) - - - 06-Jan-2010 06:03 PM

REVISIONS

NO.	SHT.	ZONE	DESCRIPTION	BY.	CKD.	APPR.	DATE
1			Part No. was 46202	KEG			1/8/85
2			Part No. was 35676	KEG			10/12/89

LIQUID LEVEL SWITCH

Gems Sensors Division

#01901
Unit Series LS-1900
S.P.S.T., 20 Watt

NOTE: New Part No. is 4520000791

REFERENCE

TOLERANCES UNLESS OTHERWISE SPECIFIED
.X ± .030
.XX ± .015
.XXX ± .005
WELDMENTS ± .06
CHAMFERS .06 X 45°
ANGLES ± 1°
BREAK ALL SHARP EDGES

MATERIAL

DRAWN	KEG	10/12/89
CHECKED	RAW	3/2/92
APPROVED	KEG	3-2-92

APPLETON MARINE, INC.

LIQUID LEVEL SWITCH

SIZE	CODE IDENT. NO.	DRAWING NO.	REV.
	70433	YMD-3069	2

SCALE | EST. WEIGHT LBS | SHEET

OFFICIAL COPY - 01.17730.0038 - VDB004 - 1 - Approved(A) - - - 06-Jan-2010 06:03 PM

Large Size – Alloys

LS-1800 and LS-1900 Series are a Step Above Our Plastic Units for Pressure Capabilities

Excellent stability for general use in oils and water

LS-1800 Series – Buna N Float

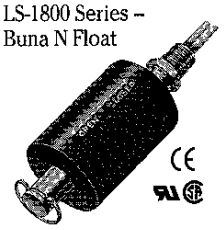

LS-1800 Series – Teflon® Float

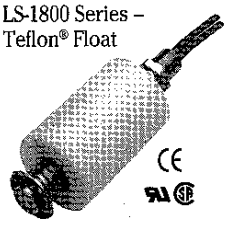

LS-1900 Series – Buna N Float

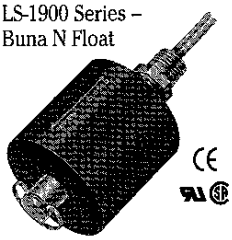

Intermediate in size, LS-1800 switches provide long life and dependability to meet a broad range of requirements.

With large float displacement, switch withstands rough service; is suitable for high viscosity liquids.

Dimensions

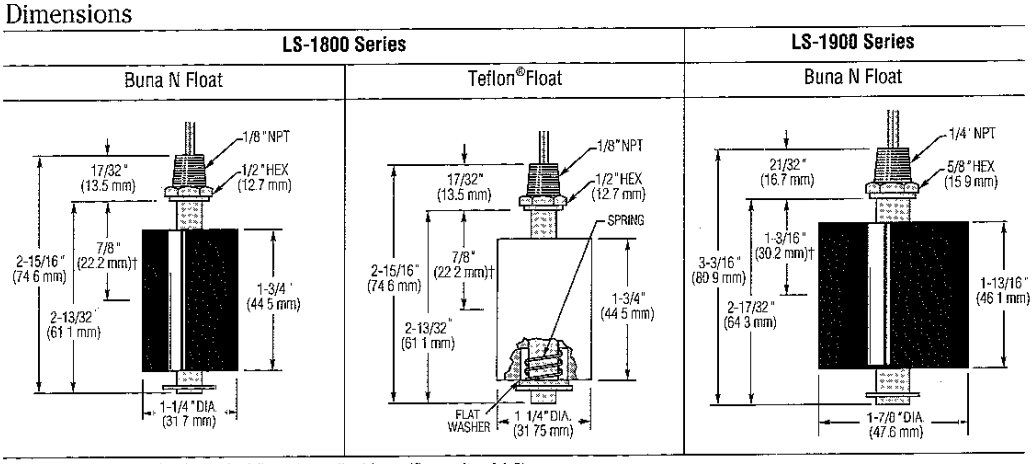

†L_1 = Switch actuation level nominal (based on a liquid specific gravity of 1.0)

Common Specifications

Electrical Termination: No.18 AWG, 24"L, Polymeric Lead Wires

Approvals: All Switches on this page are U.L. Recognized – File No. E45168, and are CSA Listed – File No. 30200

Switch Operation: Selectable, N.O. or N.C., by inverting float on unit stem (except for LS-1800 Series switch with Teflon® float). Units are shipped N.O. unless otherwise specified

How To Order – Select Part Number based on specifications required

Series Number	Material: Stem and Mounting	Material: Float	Material: Other Wetted	Min. Liquid Sp. Gr.	Operating Temperature	Pressure, PSI, Max.	Switch* SPST	Part Number
LS-1800	Brass	Buna N	316 Stainless Steel Hysol	75	Water: to 180 F (82.2 C) Oil: -40 F to +230 F (-40 C to +110 C)	150	20 VA	01801
							100 VA**	35651
	316 Stainless Steel	Buna N		75			20 VA	01807
							100 VA**	35657
		Teflon®		.65	-40 F to +250 F (-40 C to +121.1 C)	300	20 VA, N.O.	01811
LS-1900	Brass	Buna N	316 Stainless Steel Hysol	55	Water: to 180 F (82.2 C) Oil: -40 F to +230 F (-40 C to +110 C)	150	20 VA	01901
							100 VA**	35676
	316 Stainless Steel			55			20 VA	01907
							100 VA**	35682

* See 'Electrical Data' on Page A-4 for more information
**100 VA switches are not U.L. Recognized

OFFICIAL COPY - 01.17730.0038 - VDB004 - 1 - Approved(A) - - - 06-Jan-2010 06:03 PM

REVISIONS						
NO.	SHT.	DESCRIPTION	DRN.	CKD.	APP.	DATE

ANGLE SENSOR

PART NUMBER: 3PS P/N: ANS-90-05129

SPECIFICATIONS:
- PERFORMANCE:
  - MEASUREMENT RANGE: 0 TO 90 DEGREES
  - OUTPUT: 4 TO 20 mA 3 WIRE
  - RESOLUTION: < 0.01 DEGREES
  - ACCURACY: +/- 1 DEGREE
- ELECTRICAL:
  - EXCITATION: 20-32 VOLTS D.C.
  - CONNECTION: 25 FT INTEGRAL PIGTAIL, MIL-C-915E/8E WATERTIGHT SHIELDED CABLE (18-4C)
  - SENSING ELEMENT: ELECTROLYTIC TILT SENSOR
- MECHANICAL:
  - MATERIAL: 316L STAINLESS STEEL HOUSING, PASSIVATED
  - CONSTRUCTION: IP68 CABLE GLANDS (150 PSI)
    WELDED HOUSING, PASSIVATED AFTER WELDING
    ELECTRONICS POTTED WITH ELECTRONICS GRADE EPOXY
- ENVIRONMENTAL:
  - TEMPERATURE RANGE: OPERATING; -20 DEGREES C TO 70 DEGREES C
    STORAGE; -20 DEGREES C TO 70 DEGREES C
  - INGRESS PROTECTION: IP68 TO 150 FT

SUGGESTED VENDOR:
3 POINT SOLUTIONS
810 A TRADESMENS PARK LOOP
HUTTO, TX 78634
PH: (512) 759-5137
FAX: (512) 759-5138

DRAWN	CEB	25-Sep-02
CHECKED		
APPROVED		

MATERIAL COMMERCIAL

S.O. NUMBER 12874

APPLETON MARINE, INC.

ANGLE SENSOR

SIZE	CODE ID. NO.	DRAWING NO.	REV.
A	70433	YMD-8948	0

EST. WEIGHT 7 LBS SHEET 1 OF 1

OFFICIAL COPY - 01.17730.0038 - VDB004 - 1 - Approved(A) - - - 06-Jan-2010 06:03 PM

REVISIONS				
ZONE	REV	DESCRIPTION	DATE	APPROVED
	A	REL FOR APPR	5/17/02	MW

SPECIFICATIONS:

1.0 PERFORMANCE:
- 1.1 MEASUREMENT RANGE: 0 TO 90°
- 1.2 OUTPUT: 4 TO 20 MA, 3 WIRE
- 1.3 RESOLUTION: < 0.01 DEGREES
- 1.4 ACCURACY: +/- 1 DEGREE

2.0 ELECTRICAL:
- 2.1 EXCITATION: 20-32 VOLTS D.C.
- 2.2 CONNECTION: 25 FT INTEGRAL PIGTAIL; MIL-C-915E/8E WATERTIGHT SHIELDED CABLE (18-4/C)
- 2.3 SENSING ELEMENT: ELECTROLYTIC TILT SENSOR

3.0 MECHANICAL:
- 3.1 MATERIAL: 316L STAINLESS STEEL HOUSING, PASSIVATED.
- 3.1 CONSTRUCTION: IP68 CABLE GLANDS (150 PSI).
  WELDED HOUSING, PASSIVATED AFTER WELDING
  ELECTRONICS POTTED WITH ELECTRONICS GRADE EPOXY

4.0 ENVIRONMENTAL:
- 4.1 TEMPERATURE RANGE:
  OPERATING: -20 °C TO 70 °C
  STORAGE: -20 °C TO 70 °C
- 4.5 INGRESS PROTECTION: IP68 TO 150FT

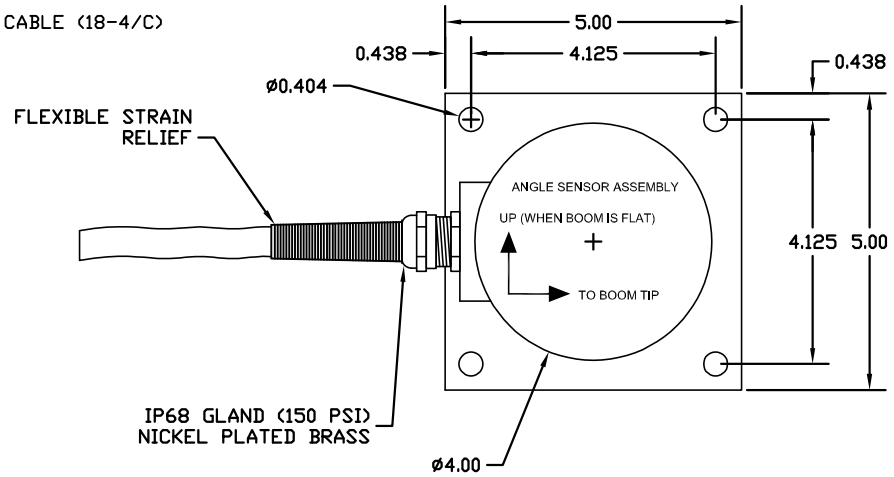

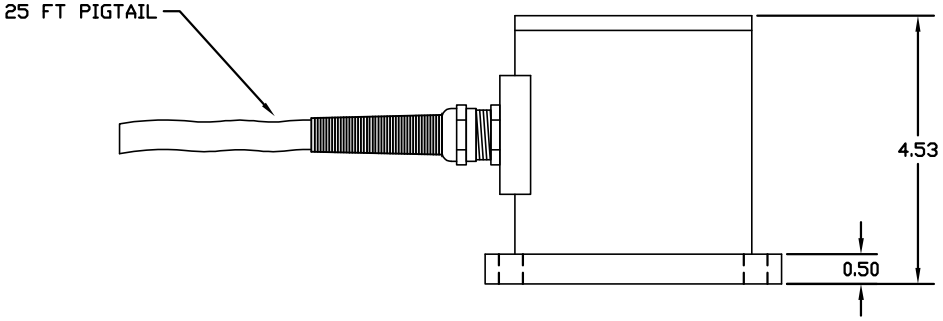

SPECIFICATION DRAWING

CONNECTIONS

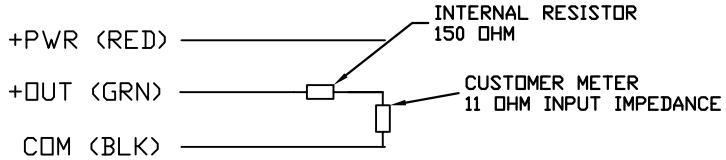

©99 BY 3PS, INC
THIS DOCUMENT MAY NOT BE COPIED OR REPRODUCED IN ANY WAY WITHOUT THE WRITTEN CONSENT OF 3PS, INC. 3PS, INC. OWNS ALL RIGHTS TO THIS WORK AND INTENDS TO ENFORCE ITS RIGHTS UNDER THE COPYRIGHT LAWS AS A PUBLISHED WORK.

APPROVALS	DATE
DRAWN MW	5/17/02
CHECK RF	5/17/02
RELEASE MW	5/17/02

UNLESS OTHERWISE SPECIFIED DIMENSIONS ARE IN INCHES
TOLERANCES ARE:
FRACTIONS ± 1/32 DECIMALS X ± .1, .XX ± .01, .XXX ± .005 ANGLES ± .5°

MATERIAL

FINISH

3PS Inc.

ANGLE SENSOR
0-90°

SIZE	FSCM NO.	DWG NO.	REV
C	1MHK2	ANS-90-05129-0	A

SCALE 3/2 SHEET 1

OFFICIAL COPY - 01.17730.0038 - VDB004 - 1 - Approved(A) - - - 06-Jan-2010 06:03 PM

REVISIONS						
NO.	SHT.	DESCRIPTION	DRN.	CKD.	APP.	DATE

Angular Position Sensor - Hazardous Location

Manufacturer: 3PS
Manufacturer P/N: ABAS-90-XXXX
Performance:

Measurement Range:	0° to 90°
Output:	4 to 20 mA , Loop Powered
Resolution:	0.1°
Static Error Band:	± 0.5° Including Non-Linearity, Non-Repeatability and Hysteresis

Electrical:

Excitation:	12-30 VDC
Connection:	Integral 25 Feet Cable Pigtail with IP68 Gland
Sensing Element:	Precision Potentiometer, 1000 Ohms

Mechanical:

Material:	316 Stainless Steel Housing

Environmental:

Temperature Range:	Operating: -18° C to 71° C Storage: -25° C to 71° C
Shock:	50g, 0.5 msec, 1/2 sine
Vibration:	50g Peak Sinusoidal, 35g RMS, 10 to 100 Hz Random
Ingress Protection:	IP68 to 60 Feet
Hazardous Area Information:	Product is Certified Intrinsic Safe for use in the Following Areas: Class 1, Division 1 Groups C, D, T4 (Ta = 75C) Class 1, Zone 0 AEx ia IIB (Ta = 75C) Zone 0, Group IIB T4 (Ta = 75C) / Ex ia IIB T4 (Ta = 75C)

SUGGESTED VENDOR:

3PS Inc.
810A Tradesmans Park Loop
Hutto, TX 78643
Tel: (512) 759-5137

www.3psinc.com

DRAWN	CEB	06-Apr-07
CHECKED		
APPROVED		

MATERIAL
COMMERCIAL

S.O. NUMBER 14960

APPLETON MARINE, INC.

Angular Position Sensor - Hazardous Location

SIZE	CODE ID. NO.	DRAWING NO.	REV.
A	70433	YMD-10166	0

EST. WEIGHT 10 lbs SHEET 1 of 1

OFFICIAL COPY - 01.17730.0038 - VDB004 - 1 - Approved(A) - - - 06-Jan-2010 06:03 PM

REVISIONS				
ZONE	REV	DESCRIPTION	DATE	APPROVED
	A	REL FOR PROPOSAL	5/11/07	MW

SPECIFICATIONS:

1.0 PERFORMANCE:

1.1 MEASUREMENT RANGE: 0 TO 90°, WITHOUT MECHANICAL STOPS

1.2 OUTPUT: 4 TO 20 MA LOOP POWERED

COMPLIANCE: $\frac{\text{VOLTS EXCITATION} - 12}{.02}$ (OHMS)

1.3 RESOLUTION: 0.1 DEGREES

1.4 STATIC ERROR BAND: +/- .5° INCLUDING NON-LINEARITY, NON-REPEATABILITY, AND HYSTERESIS.

2.0 ELECTRICAL:

2.1 EXCITATION: 12-30 VOLTS D.C. MAX

2.2 CONNECTION: INTEGRAL 25 FT MIL-C-915 CABLE PIGTAIL WITH IP68 GLAND
RED= + SOURCE, BLACK= -SOURCE

2.3 SENSING ELEMENT: PRECISION POTENTIOMETER, 1000 OHMS

3.0 MECHANICAL:

3.1 MATERIAL 316 STAINLESS STEEL HOUSING

4.0 ENVIRONMENTAL

4.1 TEMPERATURE RANGE:
OPERATING: -18 °C TO 71 °C
STORAGE: -25 °C TO 71 °C

4.3 SHOCK: 50G , 0.5MSEC, 1/2 SINE

4.4 VIBRATION: 50G PEAK SINUSOIDAL, 35 G RMS, 10 TO 100 HZ RANDOM

4.5 INGRESS PROTECTION: IP68 TO 60FT

5.0 HAZARDOUS AREA INFORMATION:

5.1 WHEN THIS SENSOR IS INSTALLED IN A HAZARDOUS EXPLOSIVE ATMOSPHERE, IT MUST BE INSTALLED IN ACCORDANCE WITH THE INSTALLATION CONTROL DRAWING 790-0024-00

5.2 THIS PRODUCT IS CERTIFIED INTRINSIC SAFE FOR USE IN FOLLOWING AREAS:
CLASS 1, DIVISION 1 GROUPS A,B,C,D,

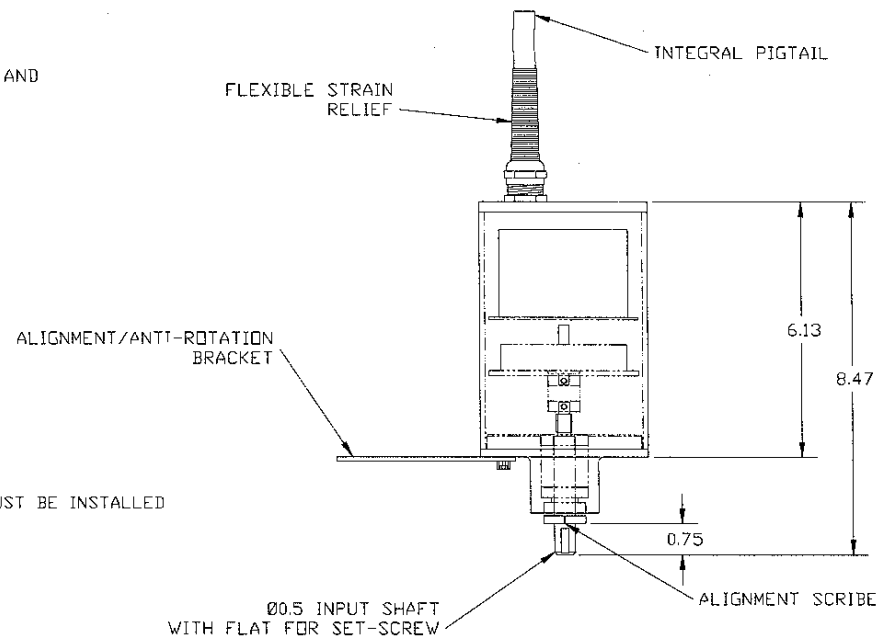

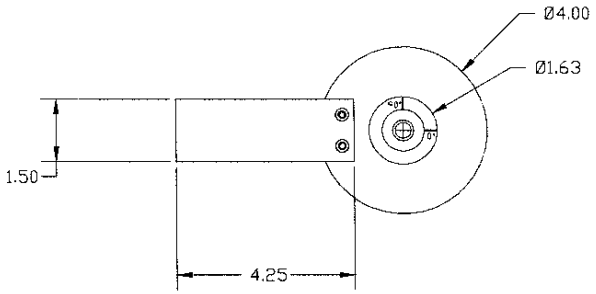

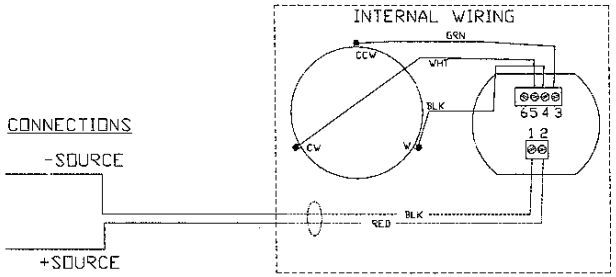

SPECIFICATION DRAWING

©99 BY 3PS, INC
THIS DOCUMENT MAY NOT BE COPIED OR REPRODUCED IN ANY WAY WITHOUT THE WRITTEN CONSENT OF 3PS, INC. 3PS, INC. OWNS ALL RIGHTS TO THIS WORK AND INTENDS TO ENFORCE ITS RIGHTS UNDER THE COPYRIGHT LAWS AS A PUBLISHED WORK.

APPROVALS		DATE
DRAWN	MW	5/11/07
CHECK	KH	5/11/07
RELEASE	MW	5/11/07

UNLESS OTHERWISE SPECIFIED DIMENSIONS ARE IN INCHES
TOLERANCES ARE
FRACTIONS ± 1/32 DECIMALS .XX ± .01 .XXX ± .005 ANGLES ± .5°

MATERIAL

FINISH

3PS Inc.

ANGULAR POSITION SENSOR
0-90°, APPLETON MARINE, I.S.

SIZE	FSCM NO.	DWG NO.	REV
C	1MHK2	ABAS-90-3492-0	A

SCALE 1/3 SHEET 1

OFFICIAL COPY - 01.17730.0038 - VDB004 - 1 - Approved(A) - - - 06-Jan-2010 06:03 PM

REVISIONS			
LTR	DESCRIPTION	DATE	APPROVED
F	ECN#1128 - NEW NOTES, P.S. FEB91	FEB'91	
G	E7829 DELETED FOXBORO REF.	6-5-91	6/5/91
H	ECN8827 CHANGE STAHL CALLOUT	6-26-97	JP
J	ECN10079 CHANGE REF TO DIVISION 1	9-7-99	JP

FM - (FACTORY MUTUAL)
APPROVED INTRINSICALLY SAFE SYSTEMS

GENERAL NOTES

1. SEE SHEET 9 AND 10 FOR APPROVED INTRINSICALLY SAFE BARRIERS.
2. SEE SHEET 8 FOR APPROVED ACTION INSTRUMENTS PRODUCTS.
3. SYTEMS USING THE TRANSMITTERS, METERS, AND BARRIERS LISTED IN THIS DOCUMENT ARE INTRINSICALLY SAFE FOR CLASS I, DIVISION I, GROUPS A-D HAZARDOUS LOCATIONS AND NON-INCENDIVE CLASS I, II AND III, DIVISION 2, GROUPS A - G, WHEN CONNECTED IN ACCORDANCE WITH THE MANUFACTURER'S INSTRUCTIONS AND THIS DOCUMENT.
4. THIS DOCUMENT IS INTENDED TO PROVIDE A LIST OF INTRINSICALLY SAFE SYSTEMS. ACTION INSTRUMENTS DOES NOT WARRANT THAT THESE SYSTEMS WILL BE SUITABLE FOR A PARTICULAR APPLICATION. CONSULT WITH ACTION INSTRUMENTS AND THE BARRIER MANUFACTURER AS TO SUITABILTIY OF A SYSTEM TO A PARTICULAR APPLICATION.
5. THIS DOCUMENT PROVIDES ONLY THE INTERCONNECTION INFORMATION NECESSARY TO FORM AN INTRINSICALLY SAFE SYSTEM. IN ADDITION, FOLLOW ALL BARRIER MANUFACTURER'S INSTRUCTIONS AND ACTION INSTRUMENTS' TRANSPAK INSTRUCTIONS FOR THE PRODUCTS USED IN A PARTICULAR SYSTEM.

CONTROLLED PRINT
AGENCY FM

NOTE: UNLESS OTHERWISE SPECIFIED

UNLESS OTHERWISE SPECIFIED DIMENSIONS ARE IN INCHES
TOLERANCES ARE:
FRACTIONS DECIMALS ANGLES
± .XX ± ANGLES ±
.XXX ±

MATERIAL

FINISH

REFERENCE DRAWINGS

DO NOT SCALE DRAWING

CONTRACT NO.

APPROVALS	DATE
DRAWN P.S.	12FEB91
CHECKED K.L.K.	3/4/91
ENGINEER K. Kunsman	3/6/91

ACTION INSTRUMENTS CO., INC.
8601 Aero Drive San Diego, CA 92123 USA

INSTALLATION DRAWING,
"FM" APPROVED SYSTEMS

SIZE	CODE IDENT NO.	DRAWING NO.	REV
B	53651	790-0024-00	J

SCALE NTS SHEET 1 OF 10

MESA REPROGRAPHICS
REORDER NO. A45955

OFFICIAL COPY - 01.17730.0038 - VDB004 - 1 - Approved(A) - - - 06-Jan-2010 06:03 PM

REVISIONS			
LTR	DESCRIPTION	DATE	APPROVED
	SEE SHEET 1		

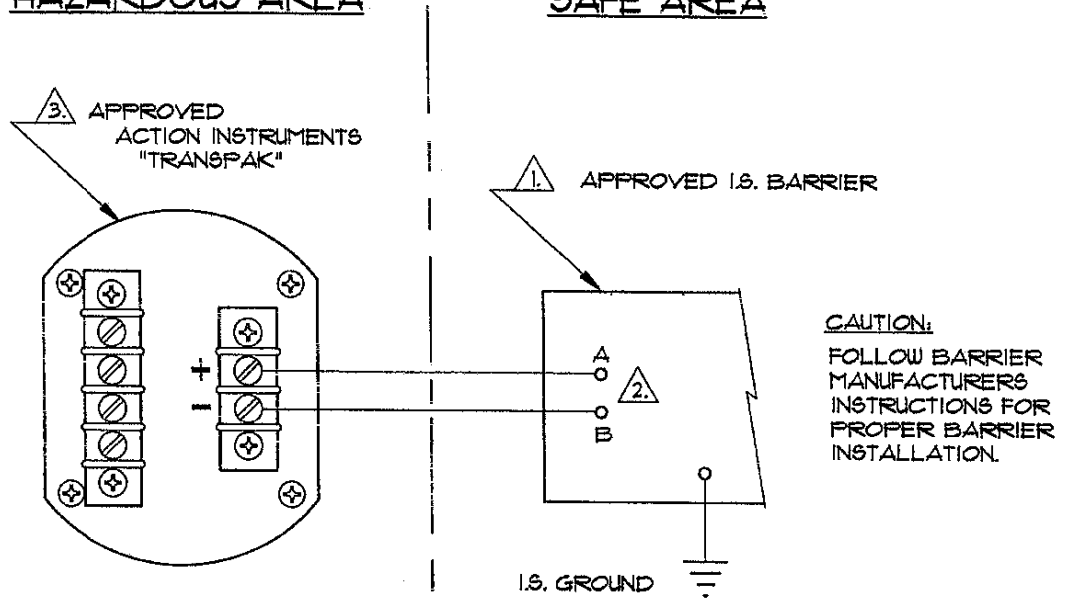

CONTROLLED PRINT
AGENCY FM

4. SOME BARRIERS ARE NOT APPROVED FOR ALL GROUPS. SEE THE INTRINSICALLY SAFE BARRIER LIST (SHEETS 9 AND 10) FOR THE APPROVED GROUPS.

3. SEE SHEET 8 FOR THE APPROVED ACTION INSTRUMENTS TRANSMITTER PRODUCTS (TRANSPAK).

2. CORRECT TERMINAL NUMBERS FOR TERMINALS A & B ARE DEFINED ON THE INTRINSICALLY SAFE BARRIER LIST (SEE SHEETS 9 AND 10).

1. SEE SHEETS 9 AND 10, FOR THE LISTING ON APPROVED INTRINSICALLY SAFE BARRIERS.

NOTE: UNLESS OTHERWISE SPECIFIED

"TRANSPAKS" USED WITH APPROVED I.S. BARRIERS DIVISION 1 LOCATIONS

REFERENCE DRAWINGS

UNLESS OTHERWISE SPECIFIED DIMENSIONS ARE IN INCHES TOLERANCES ARE:
FRACTIONS DECIMALS ANGLES
± .XX ± ±
.XXX ±

MATERIAL

FINISH

DO NOT SCALE DRAWING

CONTRACT NO.

APPROVALS	DATE
DRAWN	
CHECKED	
ENGINEER	

ACTION INSTRUMENTS CO., INC.
8601 Aero Drive San Diego, CA 92123 USA

INSTALLATION DRAWING, "FM" APPROVED SYSTEMS

SIZE	CODE IDENT NO.	DRAWING NO.	REV
B	53651	790-0024-00	J

SCALE NTS SHEET 2 OF 10

MESA REPROGRAPHICS
REORDER NO. A45955

OFFICIAL COPY - 01.17730.0038 - VDB004 - 1 - Approved(A) - - - 06-Jan-2010 06:03 PM

REVISIONS			
LTR	DESCRIPTION	DATE	APPROVED
	SEE SHEET 1		

HAZARDOUS AREA

SAFE AREA

3. APPROVED ACTION INSTRUMENTS "TRANSPAK"

1. APPROVED I.S. BARRIER

CAUTION:
OBSERVE ALL RESTRICTIONS ON INPUTS AS NOTED ON LISTING OF APPROVED TRANSMITTERS. 3.

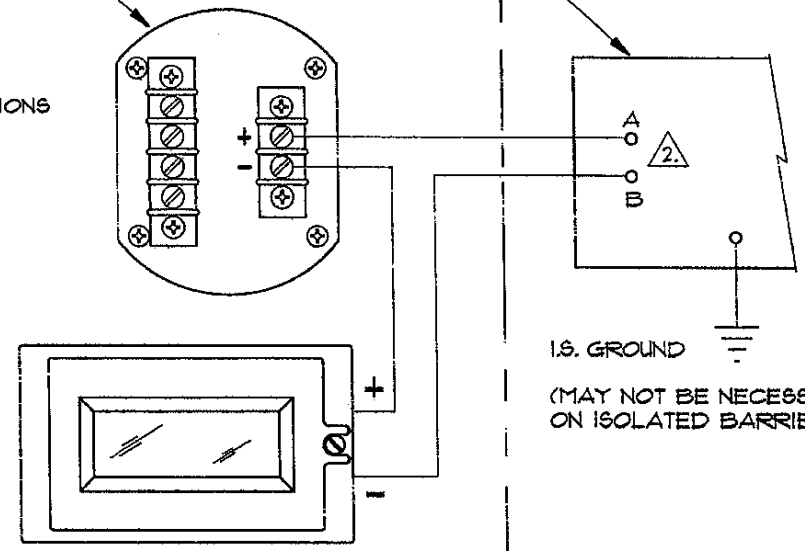

CAUTION:
FOLLOW BARRIER MANUFACTURERS INSTRUCTIONS FOR PROPER BARRIER INSTALLATION.

I.S. GROUND

(MAY NOT BE NECESSARY ON ISOLATED BARRIERS)

CONTROLLED PRINT
AGENCY EM

4.

CLASS I, DIVISION I,
GROUPS A-D HAZARDOUS LOCATIONS

"V560" AND "TRANSPAK" USED WITH APPROVED I.S. BARRIERS
DIVISION I LOCATIONS

4. SOME BARRIERS ARE NOT APPROVED FOR ALL GROUPS. SEE THE INTRINSICALLY SAFE BARRIER LIST (SHEETS 9 AND 10) FOR THE APPROVED GROUPS.

3. SEE SHEET 8 FOR THE APPROVED ACTION INSTRUMENTS TRANSMITTER PRODUCTS (TRANSPAK).

2. CORRECT TERMINAL NUMBERS FOR TERMINALS A & B ARE DEFINED ON THE INTRINSICALLY SAFE BARRIER LIST (SEE SHEETS 9 AND 10).

1. SEE SHEETS 9 AND 10, FOR THE LISTING ON APPROVED INTRINSICALLY SAFE BARRIERS.

NOTE: UNLESS OTHERWISE SPECIFIED

REFERENCE DRAWINGS

UNLESS OTHERWISE SPECIFIED DIMENSIONS ARE IN INCHES
TOLERANCES ARE:
FRACTIONS ± DECIMALS .XX ± .XXX ± ANGLES ±

MATERIAL

FINISH

DO NOT SCALE DRAWING

CONTRACT NO.

APPROVALS	DATE
DRAWN	
CHECKED	
ENGINEER	

ACTION INSTRUMENTS CO., INC.
8601 Aero Drive San Diego, CA 92123 USA

INSTALLATION DRAWING,
"FM" APPROVED SYSTEMS

SIZE	CODE IDENT NO.	DRAWING NO.	REV
B	53651	790-0024-00	J

SCALE NTS SHEET 3 OF 10

MEBA REPROGRAPHICS
REORDER NO. A45665

OFFICIAL COPY - 01.17730.0038 - VDB004 - 1 - Approved(A) - - - 06-Jan-2010 06:03 PM

REVISIONS			
LTR	DESCRIPTION	DATE	APPROVED
	SEE SHEET 1		

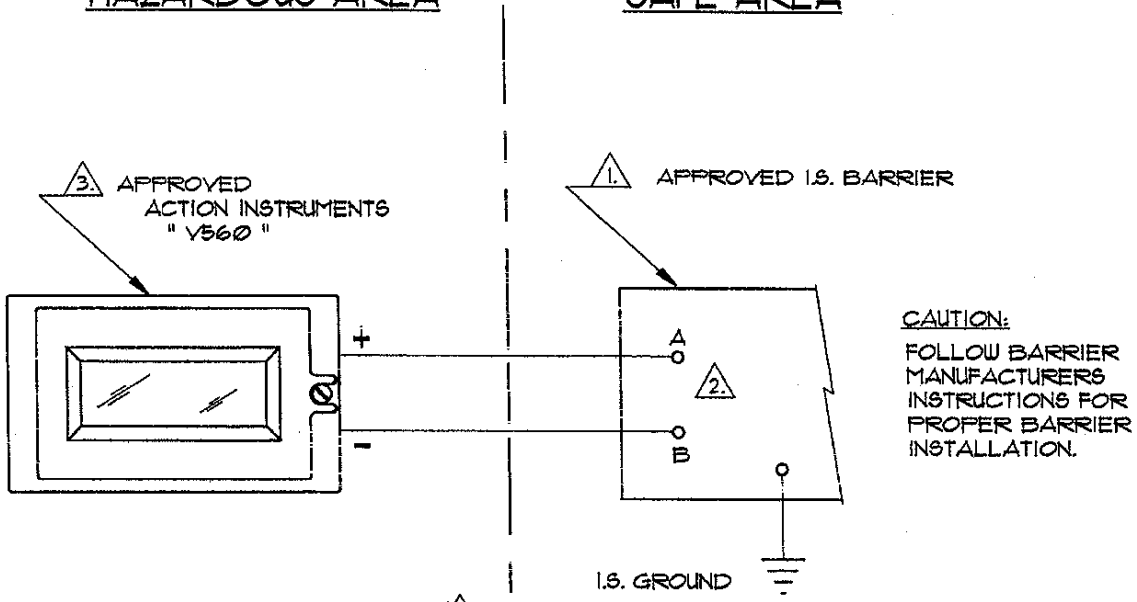

CONTROLLED PRINT
AGENCY FM

4. SOME BARRIERS ARE NOT APPROVED FOR ALL GROUPS. SEE THE INTRINSICALLY SAFE BARRIER LIST (SHEETS 9 AND 10) FOR THE APPROVED GROUPS.

3. SEE SHEET 8 FOR THE APPROVED ACTION INSTRUMENTS TRANSMITTER PRODUCTS (TRANSPAK)

2. CORRECT TERMINAL NUMBERS FOR TERMINALS A & B ARE DEFINED ON THE INTRINSICALLY SAFE BARRIER LIST (SEE SHEETS 9 AND 10).

1. SEE SHEETS 9 AND 10, FOR THE LISTING ON APPROVED INTRINSICALLY SAFE BARRIERS.

NOTE: UNLESS OTHERWISE SPECIFIED

"V560" USED WITH APPROVED I.S. BARRIERS DIVISION 1 LOCATIONS

REFERENCE DRAWINGS

UNLESS OTHERWISE SPECIFIED DIMENSIONS ARE IN INCHES
TOLERANCES ARE:
FRACTIONS DECIMALS ANGLES
± .XX ± ±
.XXX ±

MATERIAL

FINISH

DO NOT SCALE DRAWING

CONTRACT NO.

APPROVALS	DATE
DRAWN	
CHECKED	
ENGINEER	

ACTION INSTRUMENTS CO., INC.
8601 Aero Drive San Diego, CA 92123 USA

INSTALLATION DRAWING,
"FM" APPROVED SYSTEMS

SIZE	CODE IDENT NO.	DRAWING NO.	REV
B	53651	790-0024-00	J

SCALE NTS SHEET 4 OF 10

MISSA REPROGRAPHICS
RECORDER NO. A45965

OFFICIAL COPY - 01.17730.0038 - VDB004 - 1 - Approved(A) - - - 06-Jan-2010 06:03 PM

REVISIONS			
LTR	DESCRIPTION	DATE	APPROVED
	SEE SHEET 1		

HAZARDOUS AREA

SAFE AREA

△3. △2. APPROVED ACTION INSTRUMENTS "TRANSPAK"

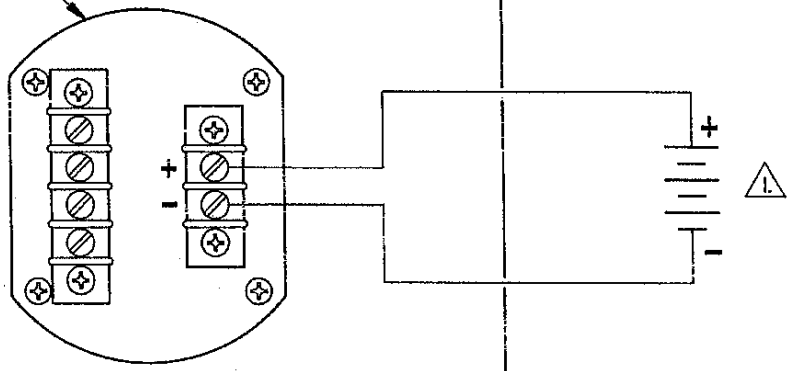

CAUTION:

OBSERVE ALL RESTRICTIONS ON INPUTS AS NOTED ON LISTING OF APPROVED TRANSMITTERS. △3.

CLASS I, II & III, DIVISION 2, GROUPS A-G HAZARDOUS LOCATIONS

CONTROLLED PRINT
AGENCY FM

"TRANSPAK" USED IN NON-INCENDIVE HAZARDOUS AREAS DIVISION 2 LOCATIONS

△3. SEE SHEET 8 FOR THE APPROVED ACTION INSTRUMENTS TRANSMITTER PRODUCTS (TRANSPAK).

△2. T100 SERIES "TRANSPAK" MODELS ONLY.

△1. 80VDC MAX, 4-20mA LOOP
60VDC MAX, 10-50mA LOOP

NOTE: UNLESS OTHERWISE SPECIFIED

REFERENCE DRAWINGS

UNLESS OTHERWISE SPECIFIED DIMENSIONS ARE IN INCHES TOLERANCES ARE:
FRACTIONS DECIMALS ANGLES
± .XX ± ±
.XXX ±

MATERIAL

FINISH

DO NOT SCALE DRAWING

CONTRACT NO.

APPROVALS	DATE
DRAWN	
CHECKED	
ENGINEER	

ACTION INSTRUMENTS CO., INC.
8601 Aero Drive San Diego, CA 92123 USA

INSTALLATION DRAWING, "FM" APPROVED SYSTEMS

SIZE	CODE IDENT NO.	DRAWING NO.	REV
B	53651	790-0024-00	J

SCALE NTS SHEET 5 OF 10

MEGA REPROGRAPHICS
REORDER NO. A45665

OFFICIAL COPY - 01.17730.0038 - VDB004 - 1 - Approved(A) - - - 06-Jan-2010 06:03 PM

REVISIONS			
LTR	DESCRIPTION	DATE	APPROVED
	SEE SHEET 1		

HAZARDOUS AREA | SAFE AREA

3. 2. APPROVED ACTION INSTRUMENTS "TRANSPAK"

CAUTION:
OBSERVE ALL RESTRICTIONS ON INPUTS AS NOTED ON LISTING OF APPROVED TRANSMITTERS. 3.

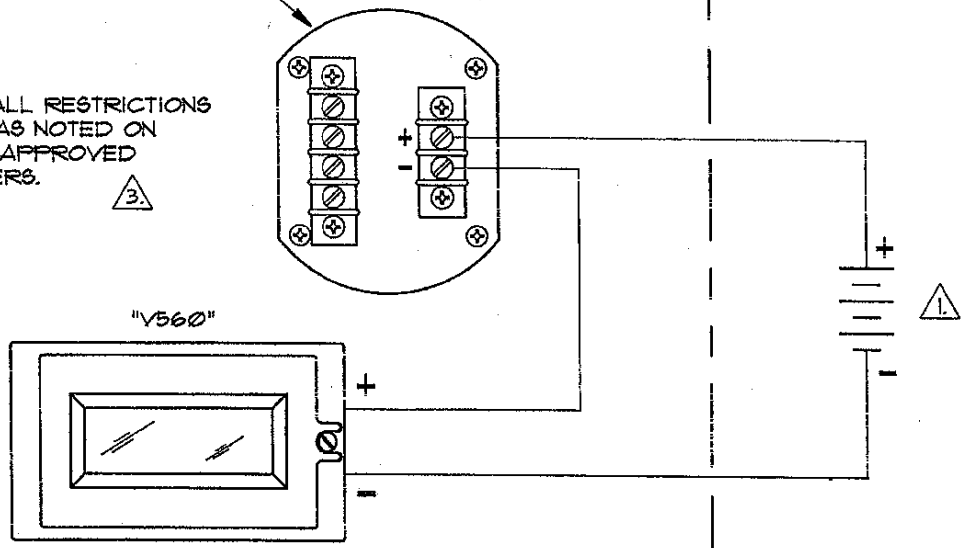

CLASS I, II & III, DIVISION 2, GROUPS A-G HAZARDOUS LOCATIONS

CONTROLLED PRINT
AGENCY FM

"V560" AND "TRANSPAK" USED IN NON-INCENDIVE HAZARDOUS AREAS DIVISION 2 LOCATIONS

3. SEE SHEET 8 FOR THE APPROVED ACTION INSTRUMENTS TRANSMITTER PRODUCTS (TRANSPAK).

2. T7100 SERIES "TRANSPAK" MODELS ONLY.

1. 80VDC MAX. 4-20mA LOOP
60VDC MAX. 10-50mA LOOP

NOTE: UNLESS OTHERWISE SPECIFIED

REFERENCE DRAWINGS

UNLESS OTHERWISE SPECIFIED DIMENSIONS ARE IN INCHES TOLERANCES ARE:
FRACTIONS DECIMALS ANGLES
± .XX ± ±
.XXX ±
MATERIAL
FINISH
DO NOT SCALE DRAWING

CONTRACT NO.

APPROVALS	DATE
DRAWN	
CHECKED	
ENGINEER	

ACTION INSTRUMENTS CO., INC.
8601 Aero Drive San Diego, CA 92123 USA

INSTALLATION DRAWING, "FM" APPROVED SYSTEMS

SIZE	CODE IDENT NO.	DRAWING NO.	REV
B	53651	790-0024-00	J

SCALE NTS SHEET 6 OF 10

MESA REPROGRAPHICS
REORDER NO. A46956

OFFICIAL COPY - 01.17730.0038 - VDB004 - 1 - Approved(A) - - - 06-Jan-2010 06:03 PM

REVISIONS			
LTR	DESCRIPTION	DATE	APPROVED
	SEE SHEET 1		

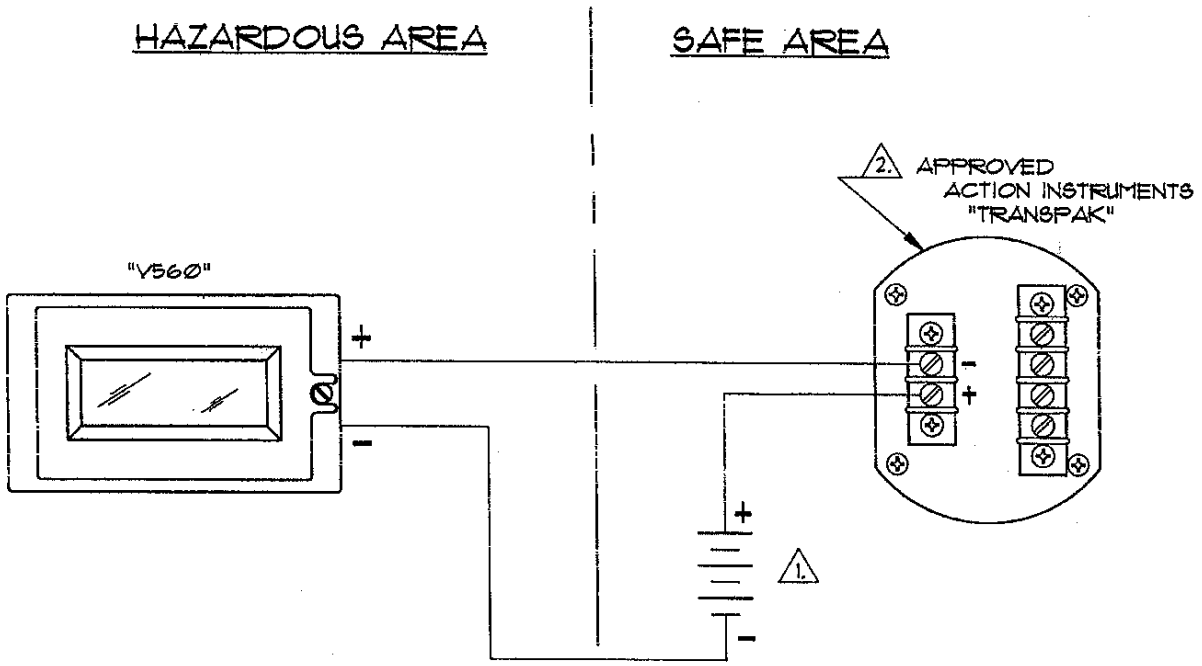

CONTROLLED PRINT
AGENCY FM

"V560" USED WITH ANY TWO-WIRE TRANSMITTER IN A NON-INCENDIVE HAZARDOUS AREA, DIVISION 2 LOCATIONS

2. ANY TWO-WIRE TRANSMITTER, WITH ANY INPUT.

1. 80VDC MAX, 4-20mA LOOP
60VDC MAX, 10-50mA LOOP

NOTE: UNLESS OTHERWISE SPECIFIED

REFERENCE DRAWINGS	UNLESS OTHERWISE SPECIFIED DIMENSIONS ARE IN INCHES TOLERANCES ARE: FRACTIONS DECIMALS ANGLES ± .XX ± ± .XXX ± MATERIAL FINISH DO NOT SCALE DRAWING	CONTRACT NO. APPROVALS DATE DRAWN CHECKED ENGINEER	ACTION INSTRUMENTS CO., INC. 8601 Aero Drive San Diego, CA 92123 USA INSTALLATION DRAWING, "FM" APPROVED SYSTEMS SIZE B · CODE IDENT NO. 53651 · DRAWING NO. 790-0024-00 · REV J SCALE NTS · SHEET 7 OF 10

MESA REPROGRAPHICS
REORDER NO. A46956

OFFICIAL COPY - 01.17730.0038 - VDB004 - 1 - Approved(A) - - - 06-Jan-2010 06:03 PM

REVISIONS			
LTR	DESCRIPTION	DATE	APPROVED
	SEE SHEET 1		

Action Instruments FM Intrinsically Safe System Rated Devices

	Model	Type	Min Volts	Isolated	Restrictions
	T601	DC	12	Yes	Non-energy storing sources less than 1Vdc only
	T605	Sq-Root	a	No	Use only with the following approved cells. 1. Statham, Transducer Div., Oxnard, CA P3000 Series 2. Rosemount Inc., Eden Prairie, MN 1151DP or 1151HP
	T610	RTD Temp	16	No	Ungrounded sensors only
	T611	RTD Temp	16	Yes	
	T620	TC Temp	12	No	Ungrounded sensors only
	T621	TC Temp	12	Yes	
	T640	Bridge	10	No	Use with FM approved cells only
	T650	Pot	12	No	
	T670	Frequency	10	No	
	T690	Pressure	10	No	Air only
(b)	T702	DC	12	No	Non-energy storing sources less than 1Vdc only
	T703	DC	12	Yes	Non-energy storing sources less than 1Vdc only
(b)	T712	RTD Temp	12	No	Ungrounded sensors only
	T713	RTD Temp	12	Yes	
(b)	T722	TC Temp	12	No	Ungrounded sensors only
	T723	TC Temp	12	Yes	
(b)	T751	Pot	12	No	
	T752	Pot	12	Yes	
	T773	Frequency	13	Yes	
	V560	Indicator	4	-	

NOTES:
a. Depends upon pressure transducer output.
b. Obsolete
c. Option A (10-50 mA) is available for all T600 Series units.
d. Non-incendive (Division 2) rating on T700 Series and V560 only.
e. Option C and U available for V560.

CONTROLLED PRINT
AGENCY FM

NOTE: UNLESS OTHERWISE SPECIFIED

REFERENCE DRAWINGS	UNLESS OTHERWISE SPECIFIED DIMENSIONS ARE IN INCHES TOLERANCES ARE: FRACTIONS DECIMALS ANGLES ± .XX ± ± .XXX ±	CONTRACT NO.
	MATERIAL	APPROVALS / DATE: DRAWN, CHECKED, ENGINEER
	FINISH	
	DO NOT SCALE DRAWING	

ACTION INSTRUMENTS CO., INC.
8601 Aero Drive San Diego, CA 92123 USA

INSTALLATION DRAWING,
"FM" APPROVED SYSTEMS

SIZE	CODE IDENT NO.	DRAWING NO.	REV
B	53651	790-0024-00	J

SCALE NTS SHEET 8 OF 10

MESA REPROGRAPHICS
REORDER NO. A45955

OFFICIAL COPY - 01.17730.0038 - VDB004 - 1 - Approved(A) - - - 06-Jan-2010 06:03 PM

REVISIONS			
LTR	DESCRIPTION	DATE	APPROVED
	SEE SHEET 1		

FM Intrinsic Safety Barrier Manufacturers Approved for use with Action Instruments Transpaks and Indicators

Mfg. Model	Vs Nom. (a)	Res. E-E (b)	Group (c)	Terminals (d) A	Terminals (d) B	Notes
MTL						
122+	18	190		3	4	f
122-	-18	190		4	3	f
128+	24	340		3	4	e,f
128-	-24	340		4	3	e,f
188(R)+	24	340		13	23	f,l
188(R)-	-24	340		23	13	f,l
702+	20-35	n		3	4	k
705+	20-35	p		4	3	g,k
706+	20-35	p		4	3	g,k
722+	18	185		3	4	
722-	-18	185		4	3	
728+	24	340		3	4	e
728-	-24	340		4	3	e
787S+	24	t		3	4	
788(R)+	24	340		3	4	l
2441	m	r		3	5	e,j,k
3041	20-35	r		5	6	e,j,k
3046	20-35	s		5	6	j,k
Pepperl & Fuchs						
EGT-001-1	20-30	r		d2	d6	e,j,k
EGT-001 (Ch 1)	20-30	r		d2	d6	e,h,j,k
EGT-001 (Ch 2)	20-30	r		z2	z6	e,h,j,k
KHD3-ICR/Ex 130 200	20-35	r		1	3	e,j,k
KHD3-ICR/Ex 130 240	20-35	r		1	3	e,j,k
KHP-100/Ex-2C	24	271	C-G	1	3	
KHP-101/Ex-2C-R	24	187	C-G	1	3	l
KHP-102/Ex-2A	24	424		1	3	
KHP-103/Ex-1A	24	340		1	2	e
KHP-106/Ex-2A-R	24	340		1	3	1
Z129/Ex	24	367		3	4	f
Z130/Ex	15-35	n		4	2	k
Z188/Ex	24	430		13	23	f
Z188/Ex-R	24	367		13	23	f,l
Z288/Ex	-24	430		23	13	f
Z288/Ex-R	-24	367		23	13	f,l
Z438/Ex	24	327		3	4	e
Z488/Ex	24	391		13	23	
Z488/Ex-R	24	327		13	23	l
Z528/Ex	-24	327		4	3	e
Z588/Ex	-24	391		23	13	
Z588/Ex-R	-24	327		23	13	l

CONTROLLED PRINT
AGENCY FM

NOTE: UNLESS OTHERWISE SPECIFIED

UNLESS OTHERWISE SPECIFIED DIMENSIONS ARE IN INCHES
TOLERANCES ARE:
FRACTIONS DECIMALS ANGLES
± .XX ± ±
.XXX ±

MATERIAL

FINISH

REFERENCE DRAWINGS

DO NOT SCALE DRAWING

CONTRACT NO.

APPROVALS	DATE
DRAWN	
CHECKED	
ENGINEER	

ACTION INSTRUMENTS CO., INC.
8601 Aero Drive San Diego, CA 92123 USA

INSTALLATION DRAWING,
"FM" APPROVED SYSTEMS

SIZE	CODE IDENT NO.	DRAWING NO.	REV
B	53651	790-0024-00	J

SCALE NTS SHEET 9 OF 10

MESA REPROGRAPHICS
REORDER NO. A45955

OFFICIAL COPY - 01.17730.0038 - VDB004 - 1 - Approved(A) - - - 06-Jan-2010 06:03 PM

REVISIONS			
LTR	DESCRIPTION	DATE	APPROVED
	SEE SHEET 2		

For Installation in Existing Systems Use the Following R. Stahl Barriers With Action Instruments Transpaks and Indicators:

Mfg. Model	Vs Nom. (a)	Res. E-E (b)	Group ©	Terminals (d) A	Terminals (d) B	Notes
R. Stahl, Inc.						
8901-30-280-100-70	-24	320	A-G	2	3	e
8901/30-280-165-80	-24	201	C-G	2	3	e,i
8901/31-280-100-70	24	320	A-G	3	2	e
8901/31-280-165-80	24	201	C-G	3	2	e,i
8903/30-284-050-70	-24	u	A-G	2	3	e
8903/31-284-050-70	24	u	A-G	3	2	e
9001/00-280-100-00	-24	303	A-G	4	3	e
9001/00-280-165-00	-24	185	C-G	4	3	e,i
9001/01-280-100-00	24	303	A-G	3	4	e
9001/01-280-165-00	24	185	C-G	3	4	e,i
9001/51-280-110-00	20-35	o	A-G	3	4	k
9005/01-252-100-00	20-40	q	A-G	6	4	e,k

For Installation in New Systems Use the Following R. Stahl Barriers With Action Instruments Transpaks and Indicators:

Model	V nom	Res.	Group	Terminals
9001/01-280-100-10	24V	302	A-G	3,4
9001/51-280-110-14	20-35	o	A-G	3,4
9002/13-280-110-00	24V	280+0.7V	A-G	3,4
9303/11-22-11	24V	0	A-G	7,8

NOTES:
a. The nominal input voltage applied to the safety barrier.
b. Total End-to-End resistance through the barrier. May be used to compute the voltage available to the transmitter by subtracting the voltage dropped across the resistance from Vs nominal.
c. Unless otherwise specified, Groups A-G
d. The barrier pin numbers that correspond to A & B in the figures. "A" is connected to the "+" terminal of Action's product. "B" is connected to the "-" terminal of Action's product.
e. May be used with T610 & T611 (16V minimum supply at 20 mA).
f. Not recommended by the manufacturer for new installations
g. Has Negative sensor polarity, but produces a Positive Output
h. Recommended for use with two sensors
i. May be used with 10-50mA transmitter (Option A)
j. Does not require a good intrinsically safe ground.
k. Current Repeater
l. Barrier output is 1-5 Volts for 4-20 mA input.
m. Input voltage = 120Vac, 240Vac, or 24Vdc
n. Available transmitter voltage = Vs-8V, 16V max., at 20 mA.
o. Available transmitter voltage = Vs-8V, 15V max., at 20 mA.
p. Available transmitter voltage = Vs-7V at 20 mA.
q. Available transmitter voltage = Vs-6.5V, 17.5v max., at 20 mA.
r. Available transmitter voltage = 17.5V at 20 mA.
s. Available transmitter voltage = 15V at 20 mA.
t. Equivalent voltage drop = 0.9V+360 Ohm
u. Equivalent voltage drop = 1.4V+110 Ohm

CONTROLLED PRINT
AGENCY FM

NOTE: UNLESS OTHERWISE SPECIFIED

UNLESS OTHERWISE SPECIFIED DIMENSIONS ARE IN INCHES
TOLERANCES ARE:
FRACTIONS DECIMALS ANGLES
± .XX ± ±
.XXX ±

MATERIAL

FINISH

REFERENCE DRAWINGS

DO NOT SCALE DRAWING

CONTRACT NO.

APPROVALS	DATE
DRAWN	
CHECKED	
ENGINEER	

ACTION INSTRUMENTS CO., INC.
8601 Aero Drive San Diego, CA 92123 USA

INSTALLATION DRAWING,
"FM" APPROVED SYSTEMS

SIZE	CODE IDENT NO.	DRAWING NO.	REV
B	53651	790-0024-00	J

SCALE NTS SHEET 10 OF 10

MESA REPROGRAPHICS
REORDER NO. A45655

OFFICIAL COPY - 01.17730.0038 - VDB004 - 1 - Approved(A) - - - 06-Jan-2010 06:03 PM

REVISIONS							
NO.	SHT.	ZONE	DESCRIPTION	BY	CKD.	APPR.	DATE

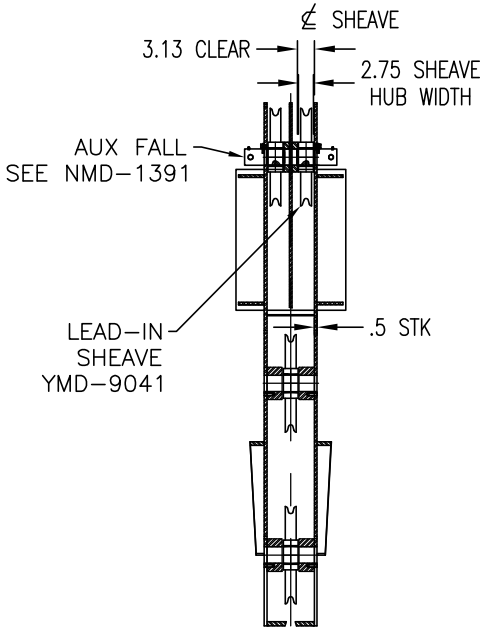

SECTION A–A

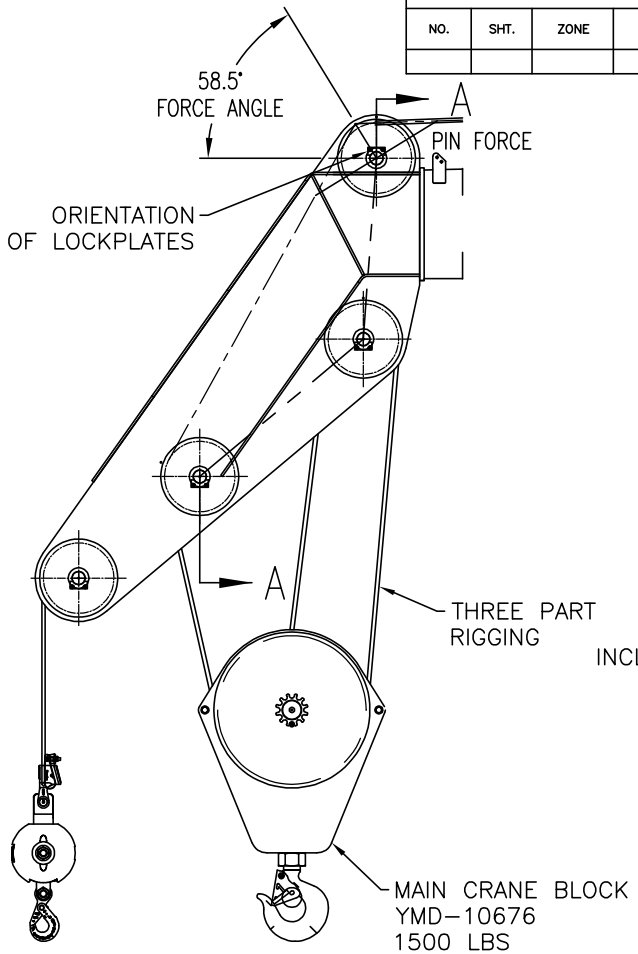

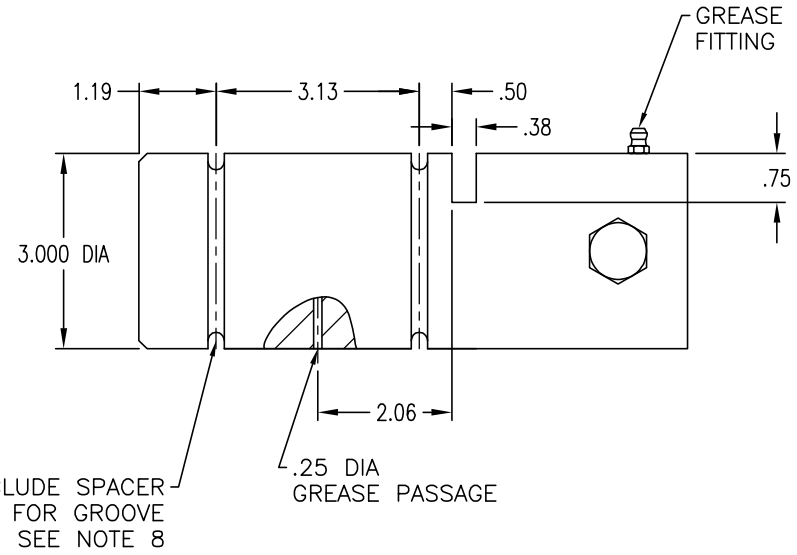

CAPACITY	PIN FORCE (LBS)	OUTPUT SIGNAL	COMMENTS
0%	493	4 mA	
100%	15705		
125%	19508	20 mA	
150%	23312		NO CALIBRATION SHIFT
300%	46130		NO MECHANICAL FAILURE

NOTES
1. SEE CHART FOR RATED FORCE AND OUTPUT SIGNAL
2. PIN MATERIAL: 17–4 PH SST PER AMS 5643, COND H1150
3. EXCITATION: 18–28 VDC
4. CONNECTION: 5 FT INTEGRAL PIGTAIL
5. OUTPUT: 4–20 MA LOOP POWERED
6. LOAD PIN MUST BE ATEX CERTIFIED AND SUITABLE FOR OPERATION IN A ZONE 1 HAZARDOUS LOCATION
7. PIN MATERIAL TO BE CHARPY V–NOTCH TESTED TO 25 FT–LBS @ 32° F
8. 3.00 O.D. NEOPRENE SPACER REQUIRED FOR EACH LOAD CELL GROOVE

REFERENCE 15940

TOLERANCES UNLESS OTHERWISE SPECIFIED
.X ± .030
.XX ± .015
.XXX ± .005
WELDMENTS ± .06
CHAMFERS .06 X 45°
ANGLES ± 1°
BREAK ALL SHARP EDGES

MATERIAL
COMMERCIAL

DRAWN	MJB	10DEC08
CHECKED		
APPROVED		

APPLETON MARINE, INC.

LOAD PIN
MAIN FALL

SIZE	CODE IDENT. NO.	DRAWING NO.	REV.
B	70433	NMD–1390	0

SCALE	EST. WEIGHT	SHEET
	16 LBS	1 OF 1

OFFICIAL COPY - 01.17730.0038 - VDB004 - 1 - Approved(A) - - - 06-Jan-2010 06:03 PM

REVISIONS							
NO.	SHT.	ZONE	DESCRIPTION	BY	CKD.	APPR.	DATE

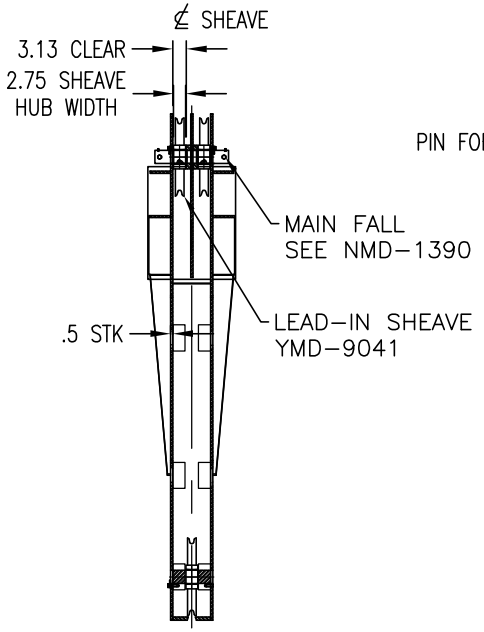

SECTION A-A

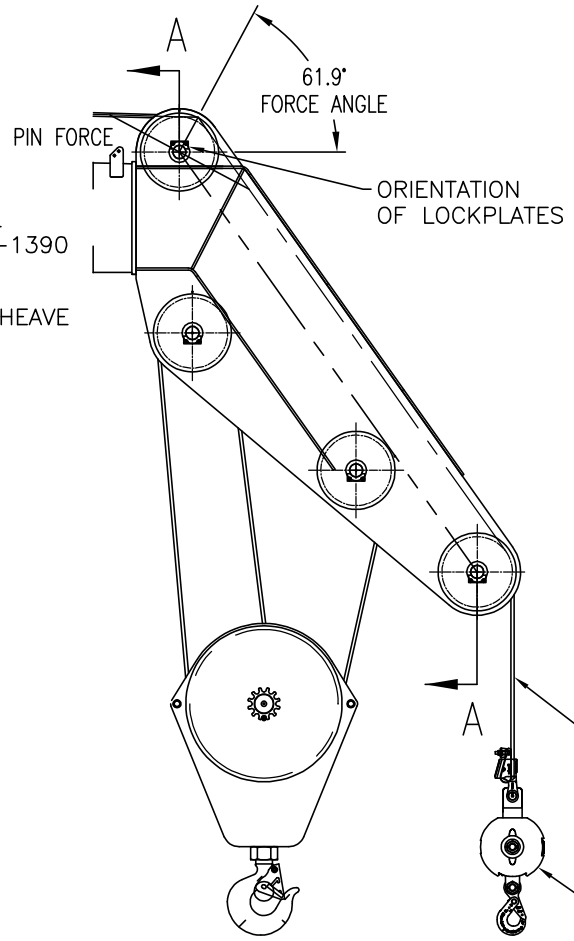

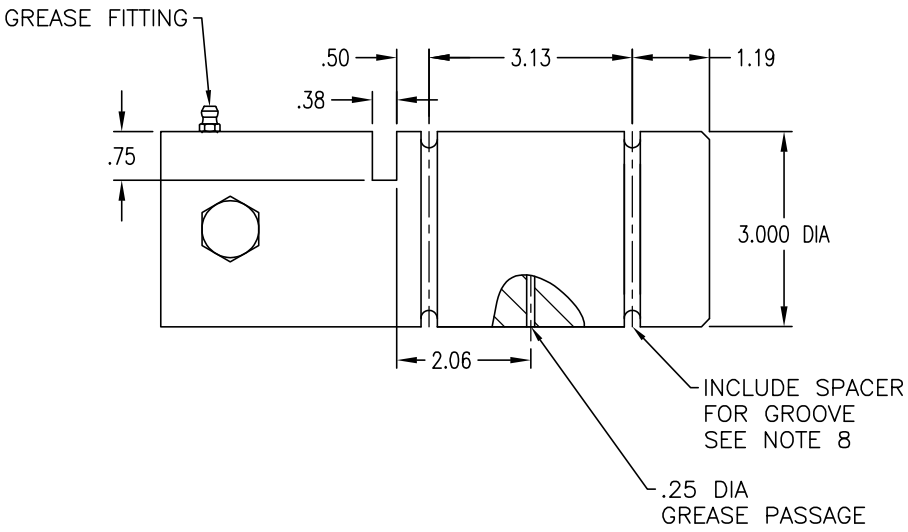

CAPACITY	PIN FORCE (LBS)	OUTPUT SIGNAL	COMMENTS
0%	285	4 mA	
100%	15062		
125%	18756	20 mA	
150%	22451		NO CALIBRATION SHIFT
300%	44616		NO MECHANICAL FAILURE

NOTES
1. SEE CHART FOR RATED FORCE AND OUTPUT SIGNAL
2. PIN MATERIAL: 17-4 PH SST PER AMS 5643, COND H1150
3. EXCITATION: 18-28 VDC
4. CONNECTION: 5 FT INTEGRAL PIGTAIL
5. OUTPUT: 4-20 MA LOOP POWERED
6. LOAD PIN MUST BE ATEX CERTIFIED AND SUITABLE FOR OPERATION IN A ZONE 1 HAZARDOUS LOCATION
7. PIN MATERIAL TO BE CHARPY V-NOTCH TESTED TO 25 FT-LBS @ 0° F
8. 3.00 O.D. NEOPRENE SPACER REQUIRED FOR EACH LOAD CELL GROOVE

REFERENCE 15940

TOLERANCES UNLESS OTHERWISE SPECIFIED
.X ± .030
.XX ± .015
.XXX ± .005
WELDMENTS ± .06
CHAMFERS .06 X 45°
ANGLES ± 1°
BREAK ALL SHARP EDGES

MATERIAL
COMMERCIAL

DRAWN	MJB	10DEC08
CHECKED		
APPROVED		

APPLETON MARINE, INC.

LOAD PIN
AUX FALL

SIZE	CODE IDENT. NO.	DRAWING NO.	REV.
B	70433	NMD-1391	0

SCALE	EST. WEIGHT	SHEET
	16 LBS	1 OF 1

OFFICIAL COPY - 01.17730.0038 - VDB004 - 1 - Approved(A) - - - 06-Jan-2010 06:03 PM

REVISIONS						
NO.	SHT.	DESCRIPTION	DRN.	CKD.	APP.	DATE

ROTARY ENCODER

BEI P/N: H25D-SS-12-GC-7272-SM14/19-S

- SINGLE TURN ENCODE R
- 12 BIT RESOLUTION (4096 CYCLES PER TURN)
- GRAY CODE
- 5-24 VDC INPUT
- 40 mA SOURCE/SINK OUTPUT
- NEMA 4 AND 13 (IP66) ENCLOSURE
- EXTENDED TEMPERATURE RANGE: -40 TO +85 DEG C
- SEE YMD-8736 FOR CONNECTOR AND CABLE

SUGGESTED VENDOR:
BEI INDUSTRIAL ENCODER DIVISION
7230 HOLLISTER AVE.
GOLETA, CA 93117-2891
TEL: 805-968-0782
FAX: 805-968-3154

DRAWN	CEB	03OCT01
CHECKED		
APPROVED		

MATERIAL: COMMERCIAL

S.O. NUMBER 12716

APPLETON MARINE, INC.

ROTARY ENCODER

SIZE	CODE ID. NO.	DRAWING NO.	REV.
A	70433	YMD-8734	0

EST. WEIGHT 5 LBS | SHEET 1 OF 1

OFFICIAL COPY - 01.17730.0038 - VDB004 - 1 - Approved(A) - - - 06-Jan-2010 06:03 PM

H25 Absolute Optical Encoder

Electrical Specifications

Code: 12 or 13 bits NB or GC; excess gray and BCD available

Counts Per Shaft Turn: 4096 or 8192

Count Transition Accuracy: ± 1/2 bit maximum

Supply Voltage: 5 – 28 VDC

Current Requirements: 120 mA typical

Output Formats: Parallel: Gray Code, Natural Binary and Binary Coded Decimal; Serial: Serial Synchronous Interface (SSI) compatible; Analog: 4-20 mA, 0-10V

Output Device: (see note 5)
7272: Line Driver, 5 – 28 VDC, $V_{out} = V_{in}$
7272: Line Driver, 5 – 28 VDC, V_{out} = 5 volts (special feature)
7273: Open Collector, accepts 5 – 28 VDC
SSI: See page 40

Protection Level: Reverse, overvoltage and output short circuit protection (7272 only)

Frequency Response: 100kHz (1200 RPM for 12-bits, 600 RPM for 13-bits)

Output Termination Pinouts: See table page 41

Mechanical & Environmental Specs

Reference the H25 Incremental Encoder, pages 16-17

Connector

MS3112E14-19P, 19–pin connector on encoder body, mates to MS3116F14-19S (or equivalent)

NOTES & TABLES: All notes and tables referred to in the text can be found on pages 50 and 51.

Figure 1 Gray Code

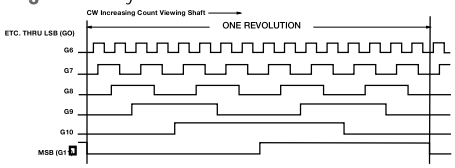

Figure 2 Natural Binary

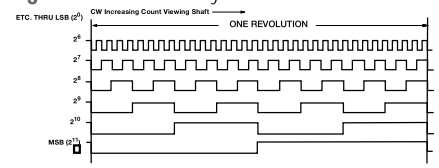



Long considered the industry standard for shafted incremental encoders, the Model H25 is now available in an absolute version with up to 13 Bits of resolution. It incorporates many of the great standard features of the incremental version, including: EMI shielding, 40-lb ABEC 7 bearings, matched thermal coefficients on critical components, and custom optics. This encoder features a 12 or 13 Bit absolute parallel gray code output, a selection line for count direction, and an output latch as standard. Output is standard gray code with options for natural binary or SSI compatible signals. Signals can be provided in either a single-ended multi-voltage line driver (TTL compatible when provided with 5 volts) or as an open-collector style of output. Typical applications include dam gate control, cranes, telescopes, tool changers, and robotics.

Certifications

CE EN 55011 and EN 61000-6-2

See Regulatory Information on pages 47–49 for further certification details.

H25D - Square Flange

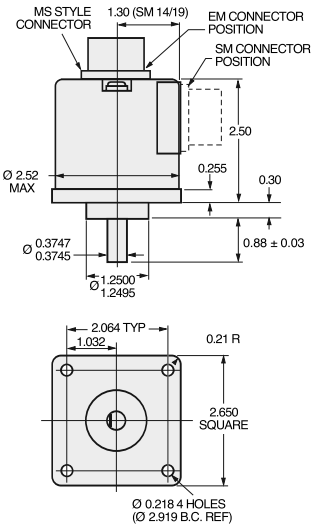

H25E - 2.50 Servo Mount

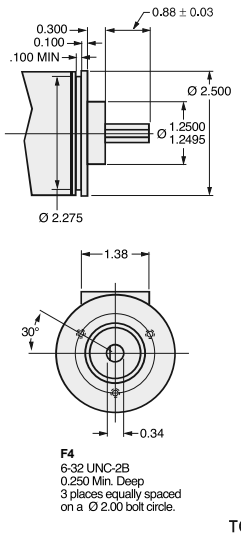

H25G - 2.62 Dia Servo Mount

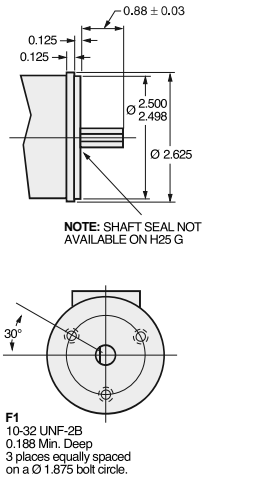

TOLERANCES: .XX = ± 0.01, .XXX = ± 0.005

H25 Absolute Encoder Ordering Options

FOR ASSISTANCE CALL 800-350-2727

Use this diagram, working from left to right to construct your model number (example: H25E-F4-SS-12GC-7272-CW-SM14/19).
All notes and tables referred to can be found on pages 50-51.

H25 – [ ] – [ ] – [ ] – [ ] – [ ] – [ ] – [ ] – [ ] – [ ] – [ ] – [ ]

TYPE:
Heavy Duty
2.5 inch Dia.

HOUSING :
D = Square Flange
E = 2.5 inch dia. servo mount
G = 2.62 inch dia. servo mount
See dimensions

FACE MOUNTS:
F1
F4
See note 1

SHAFT SEAL CONFIGURATION:
SS = Shaft Seal
See note 2

NUMBER OF BITS:
12 = 12-Bits, 4096 counts per turn
13 = 13 Bits, 8192 counts per turn
(Excess gray codes and BCD available–consult factory

CODE TYPE:
GC = Gray Code
NB = Natural Binary
BCD = Binary Coded Decimal
X = Excess gray code

OUTPUT IC TYPE:
A1 = 4-20mA; A2 = 0-10V
7272 = Line Driver
7273 = Open Collector
S3 = Serial Synchronous Interface
See note 5 and page 40 for SSI

DIRECTION CONTROL:
CW = Clockwise increasing count
CCW = Counter clockwise increasing count

OUTPUT TERMINATION LOCATION:
E = End
S = Side

TERMINATION TYPE:
M14/19 = 19 pin connector
CS= Cable with gland seal
Cable length specified in inches
(i.e. C18 = Pigtail 18" long)
See page 41

SPECIAL FEATURES:
S = Special features specified on purchase order (consult factory)
See note 6

EXPRESS ENCODERS® Items highlighted with [ ] are standard Express Encoders and ship in one to three days.

Copyright 2006 by BEI Technologies, 1-800-ENCODER, www.beiied.com

OFFICIAL COPY - 01.17730.0038 - VDB004 - 1 - Approved(A) - - - 06-Jan-2010 06:03 PM

Parallel Absolute Output

The two most common types of absolute outputs are the Gray Code and the Natural Binary. Resolution for absolute encoders is expressed in "bits" where each successive bit increases the resolution by a factor of two. For example, 10 bits = 2^{10} = 1024 counts per revolution.

Natural binary code (Figure 1) is constructed so that the code counts up using the natural sequence of binary counting, i.e. 000, 001, 010, 011, 100 . . etc. The drawback to using this code sequence is that at several count positions the code will have transitions on multiple bits simultaneously. Due to the normal variations caused by gate delays, line impedances, etc. the actual transitions will not occur simultaneously. Reading data during one of these times could result in an erroneous reading. This can be overcome by taking multiple readings.

Gray code (Figure 2), by contrast, is designed to avoid the multiple transition problem entirely. It is specifically constructed so that only one bit will transition at a time. This ensures that state changes are much less ambiguous to the controller and is generally considered to be a more robust type of absolute code.

Regardless of the code type, one of the characteristics of absolute encoders is that they can readily be used for any resolution up to and including their maximum resolution. For example, a 12 bit encoder can be used at only 8 bits by ignoring (or disconnecting) the four lowest significant bits (LSB). This enables an installation that uses multiple absolute encoders to use the same encoder throughout with each controller using only the bits that it needs.

Figure 1 Natural Binary

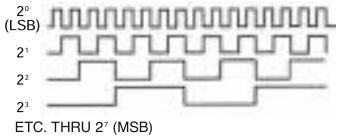

Figure 2 Gray Code

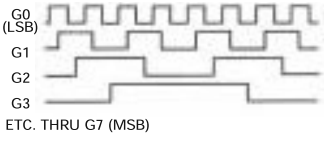

Ordering 8-Bit Absolutes

For years, we produced encoders with a maximum resolution of 8 bits. Lots of those old 8 bit encoders are still around. We update them to newer 12 bit designs on a case-by-case basis. If you have an 8 bit encoder, here is how that model number was constructed: **Direction of Rotation**, **Count, Code** and **Latch** designators were inserted between **Shaft Seal Configuration** and **Output IC** as shown below. To specify an equivalent encoder based on the 12 bit design, please call our Applications Specialists at **800-ENCODER** (800-362-6337) or check our web site at **www.beiied.com.**

Direction of Rotation: CCW or CW
Count: 8
Code: GC = Gray Code or NB = Natural Binary
Latch: L= Latch or Blank=None
Output Terminations: EM20=MS3102R20-29P or ED25=DB25P; SM18 = MS3102R18-1P; C18 = Cable, with length specified in inches. Specify ED25 for Line Driver Outputs.

Example: H25E-F1-SS-CCW-8GC-7406R-EM20
(one possible encoder configuration with the 8-Bit Absolute Option.)

Serial Synchronous Interface (SSI)

SSI output provides effective synchronization in a closed-loop control system. A clock pulse train from a controller is used to clock out sensor data: one bit of position data is transmitted to the controller per one clock pulse received by the sensor. The use of a differential driver permits reliable transmission of data over long distances in environments that may be electrically noisy. The encoder utilizes a clock signal, provided by the user interface, to time the data transmission. Receiving electronics must include an appropriate receiver as well as line terminating resistors.

Features

- Synchronous transmission
- Transmission lengths to 1000 feet
- Accepts clock rates from 100 KHz to 1.8 MHz

Data Transmission Sequence

1. Output driver of the encoder is a MAX 491 transceiver in transmit mode. The recommended receiver is a MAX 491 transceiver in receive mode.
2. Controller provides a series of pulses (or differential pulse pairs) on the CLOCK input lines.
3. On the first HIGH-to-LOW CLOCK transition, the encoder latches its data at the current position and prepares to transmit.
4. Controller reads data on the falling edge of the next 16 clock cycles.
5. The first bit is a START bit and is always HIGH.
6. Next come 12 data bits beginning with the most significant bit (MSB) and ending with the least significant bit (LSB). This is followed by three LOW pulses.
7. After the DATA bits, the DATA line goes LOW and remains LOW for a minimum of 30 microseconds between the end of the DATA bits and the beginning of the next CLOCK series.

Interfacing Long Data Lines

Cable impedance can create a transmission delay, in effect, shifting the phase relationship between the clock pulse and the data. If this phase shift exceeds 180°, then the wrong bit position will be sampled by the receiver. As a result, the maximum allowable clock frequency is a function of the cable length. For 24 AWG, stranded, 3 pair cable (BEI part number 37048-003 or equivalent) the group delay is 1.36ns/ft. The table below shows the maximum transmission rate allowable as a function of cable length to ensure a phase shift of less than 90°.

CLOCK, Maximum (kHz) = 92,000 / Cable Length (ft)CW

Cable Length (ft)	50	100	200	300	500	1000
Max Freq (kHz)	1800	900	500	300	200	100

SSI Timing

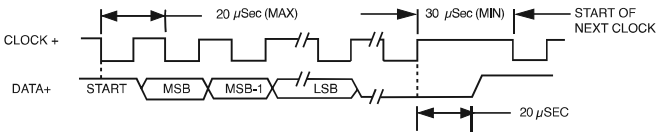

Ordering SSI

HOW TO SPECIFY SSI OUTPUT IN THE ENCODER MODEL NUMBER:

Use the designation, S3 between the **Code Format** designation and the **Connector** designation.

Example: H25D-SS-12GC-S3-CW-SM18

Copyright 2006 by BEI Technologies, 1-800-ENCODER, www.beiied.com

OFFICIAL COPY - 01.17730.0038 - VDB004 - 1 - Approved(A) - - - 06-Jan-2010 06:03 PM



Single Turn Absolute Encoder Options

The tables below are reference for pinouts, connections and operation of BEI's single turn absolute encoders. These absolute options are available in a wide range of package styles with a variety of outputs. The applicability table below shows which combinations are currently available. As always, you can call us at **800-350-ASAP** (2727) for immediate applications assistance should you have any questions.

Output Code and Terminations (12 & 13 Bit)

PARALLEL CODE						TERMINATION TYPE		
	Gray Code		Natural Binary		Binary Coded Decimal	Cable	Conn	Term Board H38 & H40
	12 Bit	13 Bit	12 Bit	13 Bit				
MSB	G_{11}	G_{12}	2^{11}	2^{12}	A_0	WHT/BLK	A	1
	G_{10}	G_{11}	2^{10}	2^{11}	B_0	WHT/BRN	B	2
	G_9	G_{10}	2^9	2^{10}	C_0	WHT/RED	C	3
	G_8	G_9	2^8	2^9	D_0	WHT/ORN	D	4
	G_7	G_8	2^7	2^8	A_1	WHT/YEL	E	5
	G_6	G^7	2^6	2^7	B_1	WHT/GRN	F	6
	G_5	G_6	2^5	2^6	C_1	WHT/BLU	G	7
	G_4	G_5	2^4	2^5	D_1	WHT/VIO	H	8
	G_3	G_4	2^3	2^4	A_2	WHT/GRY	J	9
	G_2	G_3	2^2	2^3	B_2	WHT	K	10
	G_1	G_2	2^1	2^2	C_2	GRY/BLK	L	11
LSB_{12}	G_0	G_1	2^0	2^1	D_2	GRY/BRN	M	12
LSB_{13}		G_0		2^0	A_3	GRY/RED	N	13
	*0V (CIRCUIT COMMON)				B_3	GRY/ORN	P	
	DIRECTION CONTROL					ORN	R	18
	CASE GROUND					GRN	S	16
	0 V (CIRCUIT COMMON)					BLK	T	15
	LATCH CONTROL					YEL	U	17
	+V (SUPPLY VOLTAGE)					RED	V	14
	SHIELD DRAIN					BARE	—	

*Pin P is available for a tri-state option

Output Applicability Table

	12 BITS PARALLEL	13 BITS PARALLEL	14/15 BITS	12x12 BITS	SSI	RS422	4–20 mA	0–10 V
H25	•	•			•	•	•	•
H25X			•					
HS35	•				•			
H38	•	•		•	•	•	•	•
H40	•	•		•	•	•	•	•
HMT25				•	•			

Direction Control: Standard is CW increasing when viewed from the shaft end. Pin R is normally HI (or N/C) and is pulled up internally to +V. To reverse the count direction, Pin R must be pulled LO (COMMON).

Latch control: Encoder outputs are active and provide continuous parallel position information when Pin U is HI (or N/C). Pin U is pulled up internally to +V. When Pin U is LO (COMMON) the encoder outputs are latched at the logic state that is present when the latch is applied and will stay latched until Pin U is no longer grounded.

Dir/Latch on 15-Bit Encoders: Due to a limited number of connector pins, either direction control or latch is available on pin U.

Parallel Code (14 & 15 Bit)

	Gray Code		Natural Binary		M14/19 Connector
	14 BIT	15 Bit	14 BIT	15 Bit	
LSB	G_0	G_0	2^0	2^0	A
	G_1	G_1	2^1	2^1	B
	G_2	G_2	2^2	2^2	C
	G_3	G_3	2^3	2^3	D
	G_4	G_4	2^4	2^4	E
	G_5	G_5	2^5	2^5	F
	G_6	G_6	2^6	2^6	G
	G_7	G_7	2^7	2^7	H
	G_8	G_8	2^8	2^8	J
	G_9	G_9	2^9	2^9	K
	G_{10}	G_{10}	2^{10}	2^{10}	L
	G_{11}	G_{11}	2^{11}	2^{11}	M
	G_{12}	G_{12}	2^{12}	2^{12}	N
MSB14	G_{13}	G_{13}	2^{13}	2^{13}	P
MSB15	DIR CONTROL	G_{14}	DIR CONTROL	2^{14}	R
	CASE GROUND	CASE GROUND	CASE GROUND	CASE GROUND	S
	CIRCUIT COMMON	CIRCUIT COMMON	CIRCUIT COMMON	CIRCUIT COMMON	T
	LATCH	DIR/LATCH	LATCH	DIR/LATCH	U
	+V SUPPLY VOLTAGE	+V SUPPLY VOLTAGE	+V SUPPLY VOLTAGE	+V SUPPLY VOLTAGE	V

SSI Output Termination Table

	M18 CONN	M14/19 CONN	CABLE CONN	TERM. BOARD H38	TERM. BOARD H40
DATA +	A	A	YEL	4	1
DATA-	H	B	WHT/YEL	7	7
CLOCK+	B	C	BLU	5	2
CLOCK-	I	D	WHT/BLU	8	8
DIR CONTROL	C	R	ORN	6	3
CASE GROUND	G	S	GRN	1	6
CIRCUIT COMMON	F	T	BLK	2	5
+V SUPPLY VOLTAGE	D	V	RED	3	4
SHIELD DRAIN	—	—	BARE	—	—

M18 Connector is a MS3102R18-1P, 10-pin connector on the encoder body and mates to an MS3106F18-1S connector or can be used with a standard cable/connector assembly, BEI P/N 924-31186-18XX (Where X = 10, 20 or 30 for a 10, 20, or 30 foot length). This is the preferred connector for SSI output.

M14/19 Connector is a MS3112E14-19P, 19-pin connector on the encoder body and mates to an MS3116F14-19S or equivalent.

Copyright 2006 by BEI Technologies, 1-800-ENCODER, www.beiied.com

OFFICIAL COPY - 01.17730.0038 - VDB004 - 1 - Approved(A) - - - 06-Jan-2010 06:03 PM

REVISIONS						
NO.	SHT.	DESCRIPTION	DRN.	CKD.	APP.	DATE

IR POINT GAS DETECTOR

TYCO INTEGRATED SYSTEMS BV PART NUMBER: 128-811188.2

SIMRAD GD10P IR GAS DETECTOR
OUTPUT SIGNAL: CURRENT SINK, 4-20 Ma
RESPONSE TIME: 5 SEC
DETECTION RANGE: 0-100% LEL (0-5% VOL.) METHANE
CH4
POWER SUPPLY: 24VDC
POWER CONSUMPTION: 3.5 W
EXPLOSION PROOF HOUSING:

MAIN COMPARTMENT	EExd IIC T6
TERMINAL COMPARTMENT	EExe
PROTECTION CATAGORY	IP66 / IP67 DIN 40050
HOUSING MATERIAL	316 STAINLESS STEEL
ELECTRICAL CONNECTION	3 WIRES (M20 EExe CABLE GLAND)

Tag No.: T53-GIR-650
T53-GIR-651

SUGGESTED VENDOR:
Tyco Integrated Systems BV
Trasmolenlaan 5
Postbus 283
3440 AG WOERDEN
The Netherlands
Tel: +31 (0)348 494 294
Fax: +31 (0)348 494 203

DRAWN	CEB	1-2-2006
CHECKED		
APPROVED		

MATERIAL
COMMERCIAL

S.O. NUMBER 14416

APPLETON MARINE, INC.

IR POINT GAS DETECTOR

SIZE	CODE ID. NO.	DRAWING NO.	REV.
A	70433	YMD-9797	0

EST. WEIGHT 7 LBS SHEET 1 OF 1

OFFICIAL COPY - 01.17730.0038 - VDB004 - 1 - Approved(A) - - - 06-Jan-2010 06:03 PM

WIRING DIAGRAM

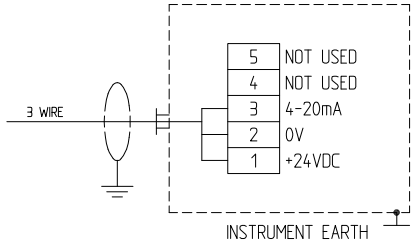

VIEWS

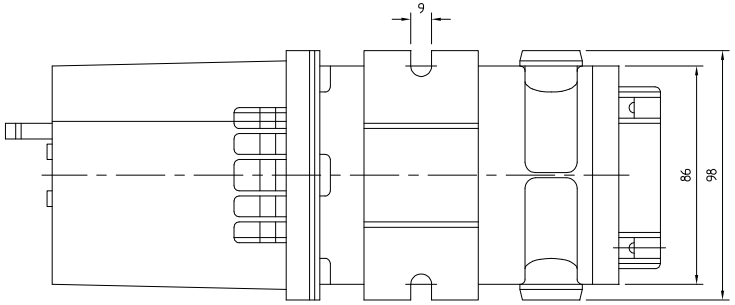

BOTTOM VIEW

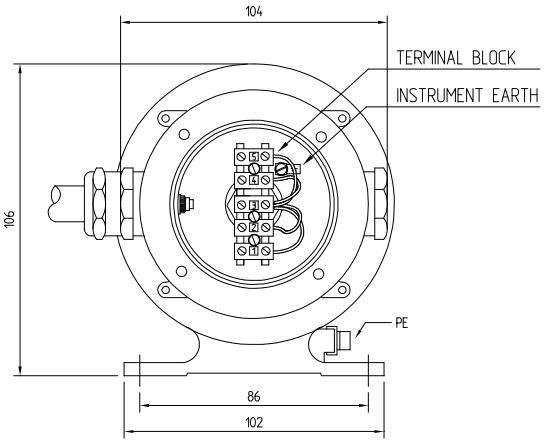

REAR VIEW with lid removed

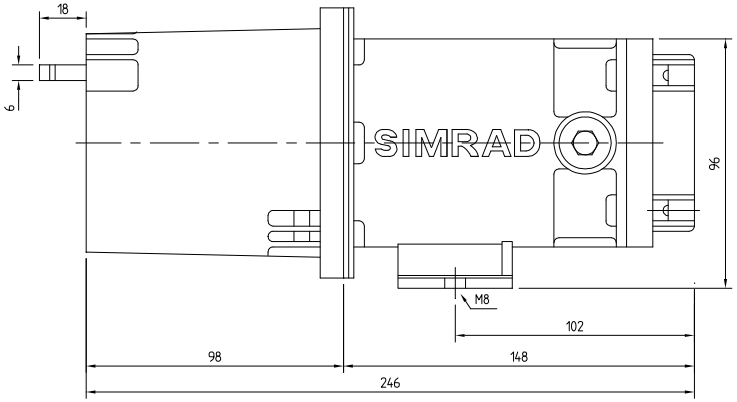

SIDE VIEW

MATERIAL LIST

ITEM	QUANT.	TYPE	DESCRIPTION	SUPPLIER	STOCK CODE	IDEN. COLOUR
A	1	GD10P	INFRARED GAS DETECTOR (SOURCE/5sec.)	SIMRAD	128-810867.2	
B	1	GD10P	INFRARED GAS DETECTOR (SINK/5sec.)	SIMRAD	128-811188.2	
C	1		WEATHER PROTECTIONG KIT (GD10)	SIMRAD	499-810913.4	
D	1		HOUSING SAMPLE FLOW ASSY	SIMRAD	499-810874.8	
E	1		BRIDGE INTERFACE ASSY	SIMRAD	109-804511.4	
F	1		DUCT MOUNTING BRACKET	SIMRAD	599-811086.8	
G	1		DUCT MOUNTING FLANGE KIT (GD10)	SIMRAD	499-811938.0	
H	1		PLATE ADAPTER	SIMRAD	499-811176.7	

MECHANICAL

DESCRIPTION	VALUE	UNITS
HOUSING MATERIAL	: STANLESS STEEL SIS2343 (ASTM316)	
DIMENSIONS	: ALL DIMENSIONS IN (mm), UNLESS WHEN NOTED	
WEIGHT	: 2.9	(kg)
GLAND	: YARD SUPPLY	
TAG LABEL	: SEE INSTRUMENT SHEET	

ELECTRICAL

POWER SUPPLY	: 18-32	(VDC)
POWER CONSUMPTION	: ~3.5W	
ELECTRICAL CONNECTION	: 3 WIRES (M20 EEXe CABLE GLAND)	
DETECTION RANGE	: 0-100% LEL	
OUTPUT	: 4-20 CURRENT SINK	(mA)
	: 0mA = FAULT	
	: 1mA = DIRTY OPTICS	
	: 4-20mA = 0-100% LEL	

ENVIRONMENTAL

OPERATING TEMPERATURE RANGE	: -20 TO +45	(°C)
STORAGE TEMPERATURE RANGE	: -40 TO +70	(°C)
RELATIVE HUMIDITY	: 99% RH (NON CONDENSING)	(%)
INGRESS PROTECTION	: IP67 DIN 40050	
EX. CLASSIFICATION HOUSING	: EEXd IIC T6	
EX. CLASSIFICATION CONNECTION SIDE	: EExe	

TITLE: FIRE & GAS DETECTION FIELD EQUIPMENT
GD10P INFRARED POINT GAS DETECTOR

tyco Fire & Security
Integrated Systems
Trasmolenlaan 5
3447 GZ Woerden
The Netherlands
Tel.: +31-348-494294

COPYRIGHT (C) THORN SECURITY NEDERLAND B.V.
ALL RIGHTS RESERVED.

PROJECT NUMBER THORN:	FORMAT:	SCALE:	SHEET:	REVISION:
S0541500264	A3	-/-	5	A

OFFICIAL COPY - 01.17730.0038 - VDB004 - 1 - Approved(A) - - - 06-Jan-2010 06:03 PM

REVISIONS						
NO.	SHT.	DESCRIPTION	DRN.	CKD.	APP.	DATE
1	1	REMOVED STN STL MOUNTING BRACKET, TYCO PN: 571.069	MJB			07MAR07

FLAME DETECTOR

FLAME DETECTOR
TYCO INTEGRATED SYSTEMS BV PART NUMBER: 516.038.003

THORN SECURITY MINERVA S200PLUS TRIPLE WAVEBAND INFRA-RED FLAME DETECTOR
PRODUCT DESIGNATION: S241f+
SIGNAL: 4-20 MA SINK
ATEX CERTIFIED
FLAMEPROOF ENCLOSURE: EEx d IIC T6
INGRESS PROTECTION: IP66/67
HOUSING MATERIAL: STAINLESS STEEL ANC4 LM25
CABLE ENTRIES: 3 X 20MM
POWER SUPPLY: 15-28VDC
POWER CONSUMPTION: 0.35MA AT 20 VDC

Tag No.: T53-IR-652

SUGGESTED VENDOR:
Tyco Integrated Systems BV
Trasmolenlaan 5
Postbus 283
3440 AG WOERDEN
The Netherlands
Tel: +31 (0)348 494 294
Fax: +31 (0)348 494 203

DRAWN	CEB	02JAN06
CHECKED	KMW	16JAN06
APPROVED	CEB	16JAN06

MATERIAL COMMERCIAL
S.O. NUMBER 14416

APPLETON MARINE, INC.

FLAME DETECTOR

SIZE	CODE ID. NO.	DRAWING NO.	REV.
A	70433	YMD-9798	1

EST. WEIGHT 12 LBS SHEET 1 OF 1

OFFICIAL COPY - 01.17730.0038 - VDB004 - 1 - Approved(A) - - - 06-Jan-2010 06:03 PM

WIRING DIAGRAM

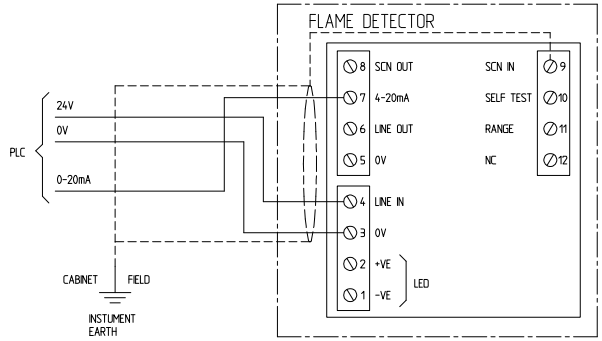

MATERIAL LIST

ITEM	QUANT.	TYPE	DESCRIPTION	SUPPLIER	STOCK CODE	IDEN. COLOUR
A	1	S241f+	INFRA-RED FLAME DETECTOR	TIS	516-038-003	
B	1	S200	BRACKET	TIS	517-001-184	

MECHANICAL

DESCRIPTION		UNIT
DETECTOR MATERIAL	: STANLESS STEEL 316L	
DIMENSIONS	: ALL DIMENSIONS IN (mm), UNLESS WHEN NOTED.	
WEIGHT (EXCL. BRACKET)	: 4,5	(kg)
WEIGHT BRACKET	: 1,1	(kg)
GLAND HOLES	: 3x20mm	
GLAND	: YARD SUPPLY	
TAG LABEL	: SEE INSTRUMENT SHEET	

ELECTRICAL

POWER SUPPLY	: 15 TO 30	(VDC)
QUIESCENT CURRENT (EX. SIGNAL)	: 0.35	(mA)
ALARM OUTPUT (CURRENT SINK)	: 4-20	(mA)
CONNECTIONS	: SCREW TERMINALS	

GENERAL

OPERATING TEMPERATURE RANGE	: -40 TO +80	(°C)
STORAGE TEMPERATURE	: -40 TO +80	(°C)
RELATIVE HUMIDITY	: 95 - NON CONDENSING	(%)
ENCLOSURE CLASS	:	
HAZARDOUS AREA	: EEXD IIC T6	
CLASSIFICATION	: UK APPROVED BY BASEEFA CERTIFICATE NUMMER Ex94C1388	

VIEWS

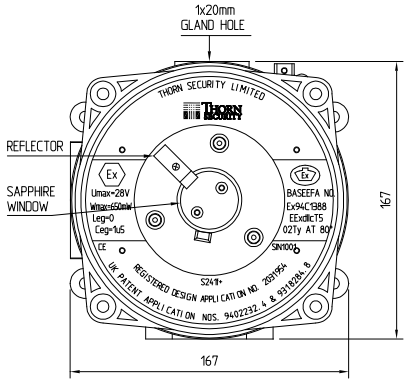

FRONTVIEW

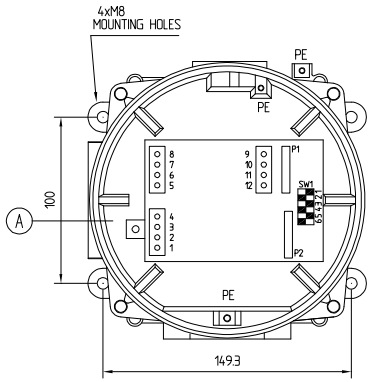

FRONT VIEW WITH LID REMOVED

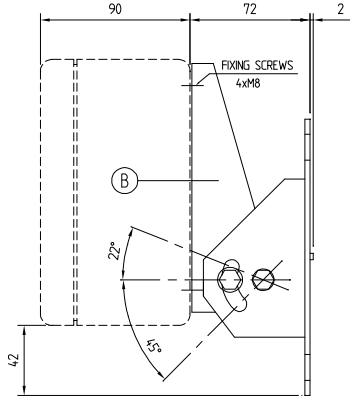

* CLEARANCE REQUIRED FOR FULL ADJUSTMENT

ASSEMBLY WALL MOUNTING BRACKET

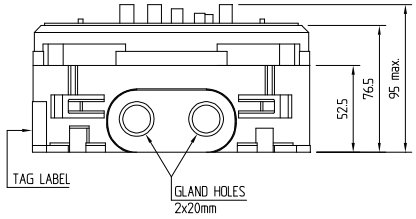

BOTTOM VIEW WITH LID

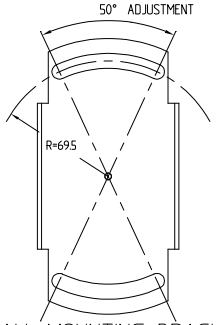

WALL MOUNTING BRACKET

SW1 SETTINGS

SW1-1	OFF	EXTENDED RANGE (50m)*	
	ON	NORMAL RANGE (25m)*	
SW1-2	OFF	FAULT UNLATCHING	
	ON	FAULT LATCHING	
SW1-3 & SW1-4	SW1-3	SW1-4	DELAY TO ALARM FUNCTION
	OFF	OFF	3 POSITIVE SAMPLES FROM 5
	ON	ON	3 POSITIVE SAMPLES FROM 5
	OFF	OFF	6 POSTIVE SAMPLES FROM 8
	ON	ON	12 POSTIVE SAMPLES FROM 14
SW1-5	OFF	ALARM LATCHING	
	ON	ALARM UNLATCHING	
SW1-6	OFF	DISCRETE SIGNALLING CURRENTS (S241 compatible mode)	
	ON	VARIABLE SIGNALLING CURRENT	

RANGE AND LATCHING SETTINGS S241+

* The Range Settings are halved if the Range Terminal (no 11) is connected to 0 volts.

If switches SW1-2 and SW1-5 are changed from OFF to ON whilst the unit is powered the change will not be effective until the unit is powered down and re-started.

NOTES

1) SUITEBLE THREAD SEALANT MUST BE USED ON ALL CABLE GLANDS AND FLAMEPROOF STOPPING PLUGS TO PREVENT THE INGRESS OF MOISTURE.
2) FOR TAGNUMBERS, SEE INSTUMENT SHEET.

S241f+

TITLE: FIRE & GAS DETECTION EQUIPMENT
S241f+ INFRARED FLAME DETECTOR 4-20mA FLAMEPROOF

tyco Fire & Security
Trasmolenlaan 5
3447 GZ Woerden
The Netherlands
Tel.: +31-348-494294
Integrated Systems

COPYRIGHT (C) THORN SECURITY NEDERLAND B.V. ALL RIGHTS RESERVED.

PROJECT NUMBER THORN:	FORMAT:	SCALE:	SHEET:	REVISION:
S0541500264	A3	-/-	10	A

OFFICIAL COPY - 01.17730.0038 - VDB004 - 1 - Approved(A) - - - 06-Jan-2010 06:03 PM

REVISIONS						
NO.	SHT.	DESCRIPTION	DRN.	CKD.	APP.	DATE

OPTICAL SMOKE DETECTOR

OPTICAL SMOKE DETECTOR
TYCO INTEGRATED SYSTEMS BV PART NUMBER: 516.054.011.Y

MR601TEX ENHANCED OPTICAL SMOKE DETECTOR
INTRINSICALLY SAFE
SIGNAL: QUIESCENT CURRENT - 5MA
ALARM CURRENT - 14MA
POWER SUPPLY: 24VDC

MUBEX DETECTOR MOUNTING BASE - 600EX/800, IS
TYCO INTEGRATED SYSTEMS BV PART NUMBER: 517.050.610

DHM69 CABLE ENTRY BOX
TYCO INTEGRATED SYSTEMS BV PART NUMBER: 517.001.231
CABLE ENTRY: 4 X Ø20MM

IP 66/67

Tag No.: T53-SO-650
T53-SO-651

SUGGESTED VENDOR:
Tyco Integrated Systems BV
Trasmolenlaan 5
Postbus 283
3440 AG WOERDEN
The Netherlands
Tel: +31 (0)348 494 294
Fax: +31 (0)348 494 203

DRAWN	CEB	1-2-2006
CHECKED		
APPROVED		

MATERIAL
COMMERCIAL

S.O. NUMBER 14416

APPLETON MARINE, INC.

SMOKE DETECTOR

SIZE	CODE ID. NO.	DRAWING NO.	REV.
A	70433	YMD-9799	0

EST. WEIGHT 2 LBS SHEET 1 OF 1

OFFICIAL COPY - 01.17730.0038 - VDB004 - 1 - Approved(A) - - - 06-Jan-2010 06:03 PM

VIEWS

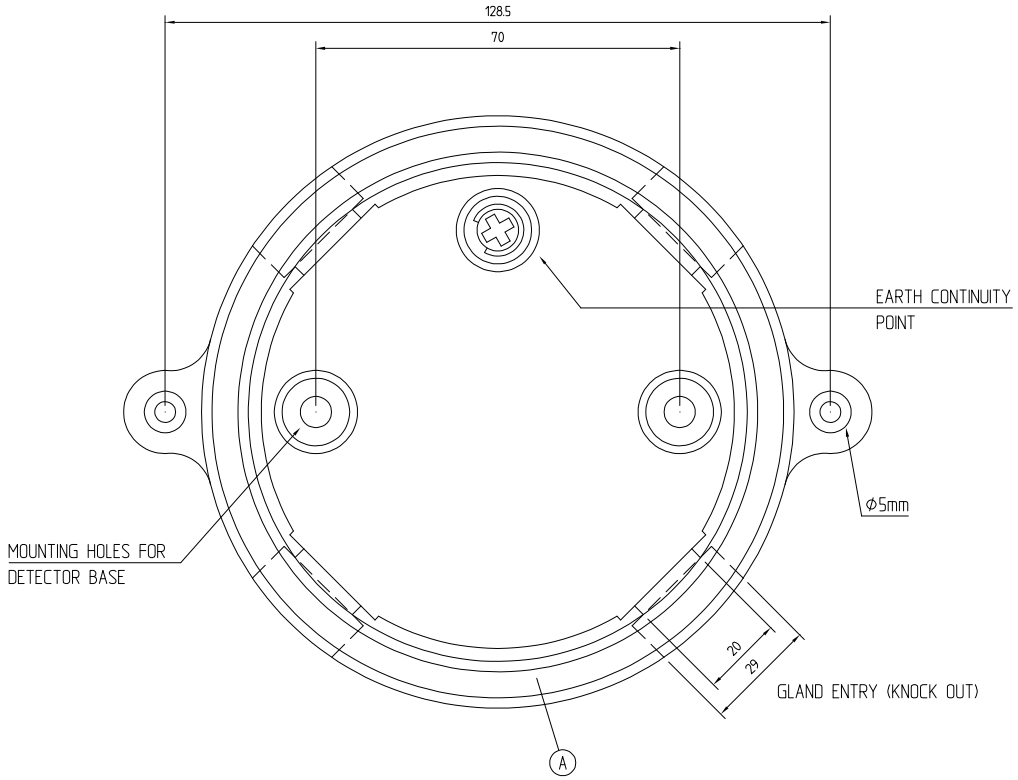

MATERIAL LIST

ITEM	QUANT.	TYPE	DESCRIPTION	SUPPLIER	STOCK CODE	IDEN. COLOUR
A	1	DHM69	DECKHEAD MOUNTING BOX	TIS	517-001-231	WHITE

NOTES

1) ALL DIMENSIONS IN (mm), UNLESS WHEN NOTED
2) GLANDS & NUTS FOR DHM69 CONNECTIONBOX FOR DETECTOR CAN BE SUPPLIED ON REQUEST

TITLE: FIRE & GAS DETECTION EQUIPMENT
DHM69 DECJHEAD MOUNTING BOX

tyco Fire & Security
Trasmolenlaan 5
3447 GZ Woerden
The Netherlands
Tel.: +31-348-494294
Integrated Systems

COPYRIGHT (C) THORN SECURITY NEDERLAND B.V.
ALL RIGHTS RESERVED.

PROJECT NUMBER THORN:	FORMAT:	SCALE:	SHEET:	REVISION:
S0541500264	A3	-/-	16	A

OFFICIAL COPY - 01.17730.0038 - VDB004 - 1 - Approved(A) - - - 06-Jan-2010 06:03 PM

WIRING DIAGRAM

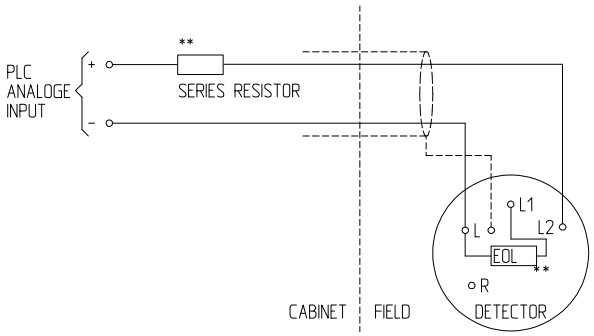

** SUPPLIED/~~FITTED~~ BY TYCO SYSTEMS

VIEWS

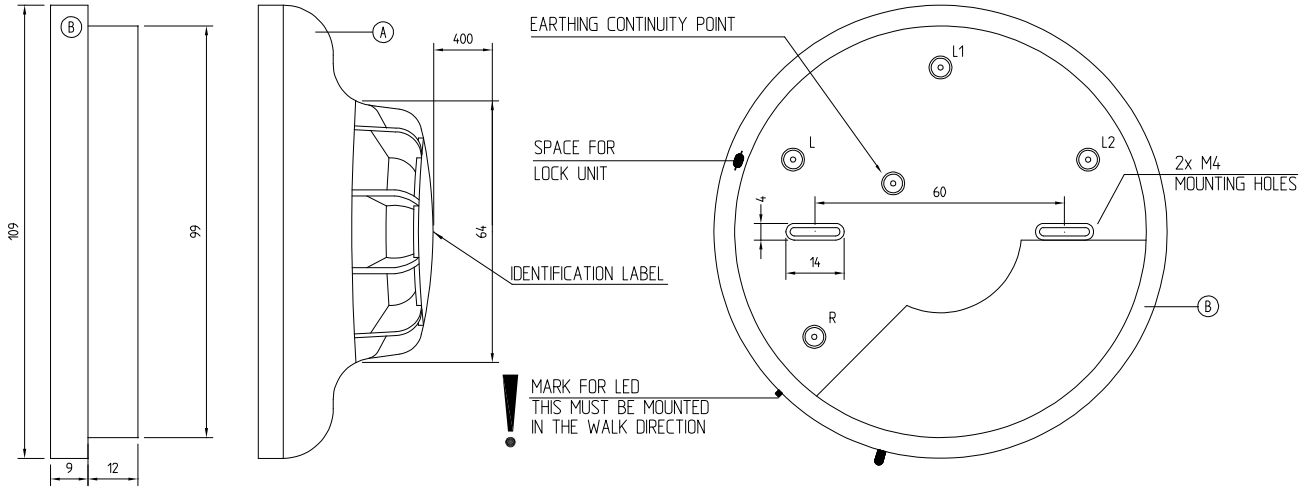

SIDE VIEW BASE SIDE VIEW DETECTOR TOP VIEW BASE

NOTES

1) IDENTIFICATION LABEL



MF601/MR601/MR601T/MU601 MD601/MD611

2) SPACE REQUIRED TO TEST THE DETECTOR

FOR EXTENSION ON EXISTING SYSTEM CONSULT TYCO INTEGRATED SYSTEMS B.V.

MATERIAL LIST

ITEM	QUANT.	TYPE	DESCRIPTION	SUPPLIER	STOCK CODE	IDEN. COLOUR
A	1	MD601	RATE OF RISE HEAT DETECTOR	TIS	516-052-001	GREEN
A	1	MD611	FIXED TEMP. HEAT DETECTOR	TIS	516-052-011	BROWN
A	1	MF601	IONISATION SMOKE DETECTOR	TIS	516-050-001	RED
A	1	MF601m	IONISATION SMOKE DETECTOR	TIS	516-050-401	RED
A	1	MR601	OPTICAL SMOKE DETECTOR	TIS	516-056-001	BLUE
A	1	MR601m	OPTICAL SMOKE DETECTOR	TIS	516-056-401	BLUE
A	1	MR601T	HPO SMOKE DETECTOR	TIS	516-054-001	GREEN
A	1	MU601	CO DETECTOR	TIS	516-058-001	YELLOW
B	1	M600/900M	MOUNTING BASE MARINE	TIS	517-050-401	

MECHANICAL

DESCRIPTION		UNIT
DETECTOR MATERIAL	: FR110 BAYBLEND	
DIMENSIONS	: ALL DIMENSIONS IN (mm), UNLESS WHEN NOTED.	
WEIGHT	: 0.2	(kg)
COLOUR	: WHITE	

ELECTRICAL

POWER SUPPLY (SUPPLY)	: 24	(VDC)
MR601M : QUIESCENT CURRENT	: 5	(mA)
ALARM CURRENT	: 14	(mA)
MF601M : QUIESCENT CURRENT	: 5	(mA)
ALARM CURRENT	: 15	(mA)
RESISTOR VALUES	: SERIES RESISTOR 1K	(Ω)
	: E.O.L. RESISTOR 3K9	(Ω)
NOTE	: MENTIONED CURRENTS MAY DIFFER DUE	
	: TO IMPEDANCE OF ANALOGE INNPUT OF PLC	
CONNECTIONS	: SCREW TERMINALS	
CABLES	: SUPPLIED BY OTHERS	

GENERAL

MR601(M)/MF601M	: OPERATING TEMP. RANGE -20 TO +70	(°C)
	: STORAGE TEMP. RANGE -25 TO +80	(°C)
NOTE	: OPERATION BELOW 0°C IS NOT RECOMMENDED UNLESS	
	: STEPS ARE TAKEN TO ELIMINATE CONDENSATION AND	
	: HENCE ICE FORMATION ON DETECTOR	
RELATIVE HUMIDITY	95 - NON CONDENSING	(%)

NOTE

FOR TAGNUMBERS SEE INSTRUMENTSHEET

600 SERIES

TITLE: FIRE & GAS DETECTION EQUIPMENT
M600 SERIES OF FIRE DETECTORS

tyco Fire & Security
Integrated Systems
Trasmolenlaan 5
3447 GZ Woerden
The Netherlands
Tel.: +31-348-494294

COPYRIGHT (C) THORN SECURITY NEDERLAND B.V.
ALL RIGHTS RESERVED.

PROJECT NUMBER THORN:	FORMAT:	SCALE:	SHEET:	REVISION:
S0541500264	A3	-/-	15	A

OFFICIAL COPY - 01.17730.0038 - VDB004 - 1 - Approved(A) - - - 06-Jan-2010 06:03 PM

REVISIONS						
NO.	SHT.	DESCRIPTION	DRN.	CKD.	APP.	DATE

PUSHBUTTON CALLPOINT

MEDC P/N: SM87PBLAD2B0YFX

UNIT TYPE: SM87
MODEL: PBL
MATERIAL: MARINE GRADE ALLOY
CERTIFICATION: EExd IIC T6, ATEX Ex II2G
CABLE ENTRIES: 1 X **M20**
DUTY LABEL: "EMERGENCY SHUTDOWN"
TAG LABEL:"CRANE ESD"
FEATURES: 4 POLE C/O SWITCH
FINISH: YELLOW AND BLACK STRIPES
INGRESS PROTECTION: IP66/67
VOLTAGE: 24VDC

Tag No.: T53-MAC-651

SUGGESTED VENDOR:
MEDC International
5829 West Sam Houston Parkway
North Suite 1005
Houston,Texas 77041
Tel: (713) 937-9772
Fax: (713) 937-9773
E-mail: sales@medc.com

DRAWN	MJB	30JUL07
CHECKED		
APPROVED		

MATERIAL
COMMERCIAL

S.O. NUMBER 14960

APPLETON MARINE, INC.

PUSHBUTTON CALL POINT

SIZE	CODE ID. NO.	DRAWING NO.	REV.
A	70433	YMD-10229	0

EST. WEIGHT 12 lbs SHEET 1 of 1

FICIAL COPY - 01.17730.0038 - VDB004 - 1 - Approved(A) - - - 06-Jan-2010 06:03 PM

DO NOT SCALE

1/ TYPE SM87PBL

2/ CERTIFICATION NO. BASEEFA Ex85B1037 EExdIICT6
Ex84B2086 EExibIICT4

3/ WEIGHT 3.8±0.2 kg

4/ MATERIAL STAINLESS STEEL GRADE 316/ANC 4B TO BS 3146:1975

5/ FUNCTION LABEL LETTER SIZE 5mm MAX

6/ TERMINALS SUITABLE FOR UP TO 2.5mm SQ CABLE

7/ CABLE ENTRIES AVAILABLE AT "T" "B" "L" "R"

8/ HYLOMAR PL32 SEALANT APPLIED TO ALL CERTIFIED BLANKING PLUGS

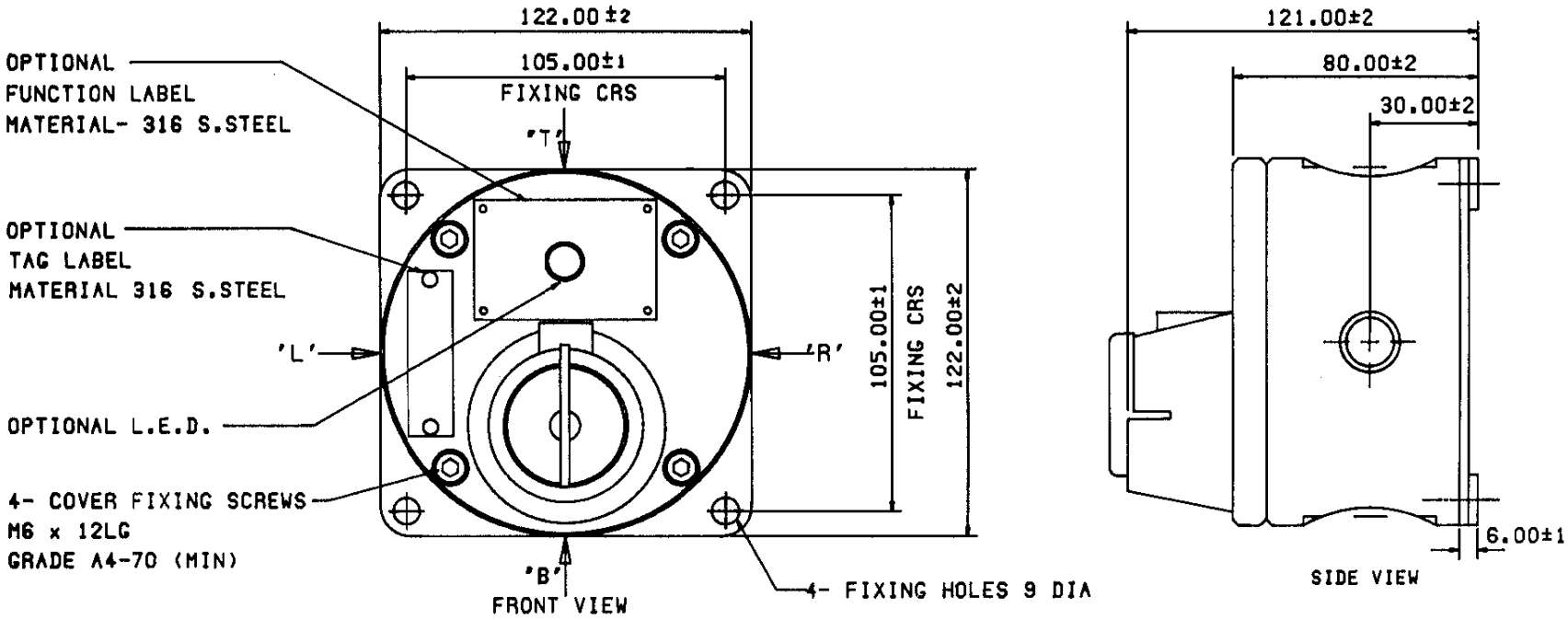

MEDC. Colliery Road, Pinxton.
Nottingham NG16 6JF. U.K.
Tel. Ripley (0773) 812249
Fax: (0773) 580282

ISSUES

WELDING TERMS & SYMBOLS TO BS 499 PART 2
CARBON STEEL TO BE WELDED IN ACCORDANCE WITH BS 5135
STAINLESS STEEL TO BE WELDED IN ACCORDANCE WITH BS 3019 PT 2 - 1960
WELDS TO BE FREE FROM SLAG & SPLATTER

MACHINE SYMBOLS THUS √ µm
REMOVE ALL BURRS AND SHARP EDGES

TOLERANCES	
GEN.	MC OR CRS
±0,5	±0,3

THIS DRAWING IS CONFIDENTIAL AND IS THE PROPERTY OF MEDC AND MUST NOT BE REPRODUCED EITHER WHOLLY OR PARTLY. ALL RIGHTS IN RESPECT OF PATENTS, DESIGNS AND COPYRIGHT ARE RESERVED.

DRN. 4/94
CH'D
AP'D
SCALE –
METRIC DIMENSIONS ONLY (U.O.S.)

TITLE
SM87PBL
TURN & PUSH
GENERAL ARRANGEMENT

SIZE A4 | DRG NO S/068-01-01 | ISSUE A

Amber

OFFICIAL COPY - 01.17730.0038 - VDB004 - 1 - Approved(A) - - - 06-Jan-2010 06:03 PM

APPLETON MARINE, INC.

SBM OFFSHORE

FPSO P57

BR PETROBRAS NETHERLANDS B.V.

Project Title: FPSO P57

01.17730.0038	AK	002	00	X-G0520
P.O. Number	CDR Code	Sequence Number	Doc. Rev	Tag No.

Document Title: Equipment Schedule and Data Sheets

Crane Serial Number: 15940

OFFICIAL COPY - 01.17730.0038 - VDB004 - 1 - Approved(A) - - - 06-Jan-2010 06:03 PM

Appleton Marine Inc. Equipment Data Sheets

Appleton Marine SO: 15940
Customer: Single Buoy Moorings (SBM)
Customer P.O: 01.17730.0038
Customer Specification: SO17730SKF05050 A2 (FPSO Deck Crane Specification)
Project: FPSO P57
Equipment: AMI Model SB750-115 Pedestal Crane
Customer Designation: STARBOARD FIXED BOOM CRANE
Customer Tag Number: X-G0250

Equipment Type: Fixed Length Box Boom, Hydraulic Cylinder Luffed Crane

Boom Length:
- Main Fall: 35 m
- Auxiliary Fall: 36 m

Crane Lifting Capacities:

Lifting Conditions:
- Type of Lifting: Offloading of Cargo from Supply Boats
- Sea State: 2.3 meter Significant Wave Height
- Wind: 25 m/sec per SBM Appendix 1 MDS0016M-B, Data Sheet Item 44
- Vessel Motions:
  - Vessel Heel: 2.5° per API SPEC 2C
  - Vessel Trim: 1.0° per API SPEC 2C
  - Maximun Roll:
  - Accelerations

a_x (pitch)	0.9 m/s^2	0.092 g
a_y (roll)	0.9 m/s^2	0.092 g
a_z (heave)	10.5 m/s^2	1.068 g

- Operating Temperature

Minimum	14 ° C	57.2 ° F
Maximum	39 ° C	102.2 ° F

- Certification: ABS

Cargo Offloading Lifting Capacity H_{sig} = 2.3 m			
Radius	Boom Angle	Capacity	C_v
m	degrees	Metric Tonne	
6.25	80.11	21.0	1.53
8.00	77.21	21.0	1.53
10.00	73.86	21.0	1.53
12.00	70.44	21.0	1.53
14.00	66.94	21.0	1.53
16.00	63.35	21.0	1.53
18.00	59.63	21.0	1.53
20.00	55.76	20.0	1.54
22.00	51.69	17.9	1.57
24.00	47.38	16.1	1.61
26.00	42.73	14.6	1.64
28.00	37.61	13.3	1.67
30.00	31.78	12.2	1.70
32.00	24.72	11.3	1.72
34.00	14.64	10.4	1.75
35.00	0.00	10.0	1.77

20.6t @ 15m

20t @ 20m

OFFICIAL COPY - 01.17730.0038 - VDB004 - 1 - Approved(A) - - - 06-Jan-2010 06:03 PM

Crane Lifting Capacities: Main Fall

Lifting Conditions:

Type of Lifting:	Onboard Lifting of Cargo (with in vessel)
Sea State:	3.0 meter Significant Wave Height (H_{sign} = 3.0 m)
Wind:	25 m/sec per SBM Appendix 1 MDS0016M-B, Data Sheet Item 44
Vessel Motions:	
Vessel Heel:	2.5° per API SPEC 2C
Vessel Trim:	1.0° per API SPEC 2C
Vertical Acceleration	a_{vert} = 1.116g per API Spec 2C Sixth Edition, H_{sign} = 3.0 m
Horizontal Accelerations	a_{horz} = 0.124g per API Spec 2C Sixth Edition, H_{sign} = 3.0 m
Certification:	ABS

Onboard Cargo Lifting Capacity H_{sign} = 3.0 m			
Radius	Boom Angle	Capacity	C_v
m	degrees	Metric Tonne	
6.25	80.11	20.0	1.45
8.00	77.21	20.0	1.45
10.00	73.86	20.0	1.45
12.00	70.44	20.0	1.45
14.00	66.94	20.0	1.45
16.00	63.35	20.0	1.45
18.00	59.63	20.0	1.45
20.00	55.76	20.0	1.45
22.00	51.69	20.0	1.45
24.00	47.38	20.0	1.45
26.00	42.73	20.0	1.45
28.00	37.61	20.0	1.45
30.00	31.78	19.0	1.45
32.00	24.72	17.5	1.45
34.00	14.64	16.0	1.45
35.00	0.00	15.0	1.45

Hoisting Performance:

Main Fall:

Rigging:	3 Part
Max Lift Capcity:	21.0 Metric Tonne
Maximum Block Speed:	27.0 m/min Average

OFFICIAL COPY - 01.17730.0038 - VDB004 - 1 - Approved(A) - - - 06-Jan-2010 06:03 PM

Crane Lifting Capacities: Auxiliary Fall

Lifting Conditions:

Type of Lifting:	Offloading of Cargo from Supply Boats
Sea State:	2.3 meter Significant Wave Height (H_{sign} = 2.3 m)
Wind:	25 m/sec per SBM Appendix 1 MDS0016M-B, Data Sheet Item 44
Vessel Motions:	
Vessel Heel:	2.5° per API SPEC 2C
Vessel Trim:	1.0° per API SPEC 2C
Vertical Acceleration	a_{vert} = 1.068g per API Spec 2C Sixth Edition, H_{sign} = 2.3 m
Horizontal Accelerations	a_{horz} = 0.092g per API Spec 2C Sixth Edition, H_{sign} = 2.3 m
Certification:	ABS

Auxiliary Fall Lifting Capacity: 7.5 Metric Tonnes at all Radii, out to a maximum of 36.0 m.

Hoisting Performance:

Auxiliary Fall:

Rigging:	1	Part	
Max Lift Capcity:	7.5	Metric Tonne	
Maximum Block Speed:	75.0	m/min	(on base layer of drum, at lowest hook position)

Luffing Performance:

Luffng Range:

Minimum Boom Angle:	0.0	°	
Maximum Boom Angle:	80.0	°	
Minimum Luffing Time:	105	sec	Luffing time is for maximum onboard capacity, from minimum boom angle to maximum boom angle.

Slewing Performance:

Slewing Range:	360	°	360° continuous rotation
Maximum Slewing Speed:	1.0	RPM	

Hazardous Location Certification

Boom Tip	Class 1, Zone 1	Load Pins, Anti-2-Block, Flood Light, Strobe
Boom Mid Section	Class 1, Zone 1	Flood Lights
Boom Heel	Non Hazardous	
Crane Turret	Non Hazardous	
Turret Mounted HPU	Non Hazardous	
Turret Mounted Operator's Cab	Non Hazardous	
Interior Crane Pedestal	Non Hazardous	

Crane Structural Interface

Crane Pedestal:

Outside Diameter:	3048.0	mm
Wall Thickness:	19	mm
Material:	ASTM A572 Grade 50	

Foundation Reactions:

Axial Load:	1100	kN
Radial Load:	200	kN
Overturning Moment:	18500	kN-m
Slewing Torque:	2100	kN-m

Crane Electrical Interface:

Main Power: 220 VAC 3Φ 60 Hz @ 30 Full Load Amps

OFFICIAL COPY - 01.17730.0038 - VDB004 - 1 - Approved(A) - - - 06-Jan-2010 06:03 PM

Hydraulic Power Unit

Prime Movers:

Diesel Engine

Quantity per HPU	1	
Power (Each):	270 HP	
Speed:	1800 rpm	

Pumps:

Winch, Luff Functions

Pump Type:	Pressure Compensated, Load Sensing, Axial Piston Type	
Maximm Pressure:	230 Bar	
Maximum Flow:	435 L/min	Per each pump
HP Limit:	kW	HP limit is per pump

Slew Function

Pump Type:	Pressure Compensated, Load Sensing, Axial Piston Type	
Maximm Pressure:	230 Bar	
Maximum Flow:	435 L/min	Per each pump
HP Limit:	kW	The Slew pump is the priority pump

Cooling & Offline Filtration:

Pump Type:	Fixed Dispalcement Vane	
Maximm Pressure:	20 Bar	
Maximum Flow:	75 L/min	

Hydraulic Reservoir:

Construction:	Fabricated steel with anti-corrosion protection	
Capacity:	2840 L	
Electric Requirements:		

Hydraulic Oil Coolers:

Quantity:	1	
Type:	Air over Hydraulic	
Power Dissapation:	10 kW	

Addtional Crane Equipment:

Boom Flood Lights

Quantity:	2	
Power:	400 Watts	220 VAC 60 Hz
Classification:	Class 1, Zone 1	

Warning Marker Light

Quantity:	1	
Power:	10 Joule	Red flashing zenon strobe light, 220 VAC 60 Hz
Classification:	Class 1, Zone 1	

Cab Air Conditioner/Heater:

Capacity - Cooling:	13500 Btu	220 VAC 60 Hz
Capacity - Heating:		
Classification:	None	

Additional Crane Safety features:

Main & Aux Anti-2-Block Limits
Main & Aux Pay-Out Limits
Main & Aux Slack Wire Indication
Main & Aux Load Monitor System with visual & audible alarms and overload protection
Emergency load release feature for main, aux and slew functions.

OFFICIAL COPY - 01.17730.0038 - VDB004 - 1 - Approved(A) - - - 06-Jan-2010 06:03 PM

7) Electrical power requirements as follow:

UPS Power: 220 VAC 1 Phase 60 Hz @ 7.5 Full Load Amps

8) Hazardous Location Ratings for the Crane

Pedestal The interior and exterior of the pedestal is rated for Zone 2 hazardous locations for both operating and shutdown conditions.

Turret The crane turret, including the operator's cab and hydralic power unit are rated for safe areas while the crane is operating. While the crane is shut down, all of the equipment on the crane turret (including the electric motors, MCC and Fire & Gas Safety Sytem) are rated for Zone 2 hazardous locations.

Boom All of the equipment on the boom (past the boom heel section) are rated for Zone 1 Hazardous locations for both operating and shutdown conditions.

OFFICIAL COPY - 01.17730.0038 - VDB004 - 1 - Approved(A) - - - 06-Jan-2010 06:03 PM

APPLETON MARINE, INC.

SBM OFFSHORE

FPSO P57

BR PETROBRAS NETHERLANDS B.V.

Project Title: FPSO P57

01.17730.0038	AR	002	00	X-G0520
P.O. Number	CDR Code	Sequence Number	Doc. Rev	Tag No.

Document Title: Assembly Drawing & Part List

Crane Serial Number: 15940

AMD-1973	Crane Assembly
AMD-2009	Piping Assembly
AMD-2011	Power Unit Assembly
AMD-2012	Cab Assembly
AMD-2013	Main Winch Assembly
AMD-2007	Aux Winch Assembly

OFFICIAL COPY - 01.17730.0038 - VDB004 - 1 - Approved(A) - - - 06-Jan-2010 06:03 PM

APPLETON MARINE, INC.

Code ID NO. 70433

PARTS LIST FOR:
CRANE ASSEMBLY
AMD-1973
Customer: SBM OFFSHORE GROUP

S.O. NO. 15940
B.M. SERIES 2

Date Run: 10/2/2009
Prep'd By: KEG

ITEM	*QTY*	*PART NO.*	*DESCRIPTION*	*MAT'L / VENDER*	*WT(LBS)*
1.00	1	YMD-9076	TURNTABLE BEARING	COMMERCIAL	5430
2.00	3	YMD-10675	PLANETARY SPEED REDUCER WITH BRAKE	COMMERCIAL	916
3.00	3	YMD-10588	HYDRAULIC MOTOR	COMMERCIAL	40
4.00	1	YMD-9714	SWING COUNTERBALANCE VALVE	COMMERCIAL	200
5.00	1	YMD-10676	CRANE BLOCK	COMMERCIAL	1500
6.00	1	YMD-10265	OVERHAUL BALL	COMMERCIAL	319
7.00	1	YMD-10677	WIRE ROPE, MAIN FALL	COMMERCIAL	1750
8.00	1	YMD-10678	WIRE ROPE, AUX FALL	COMMERCIAL	775
9.00	5	YMD-9041	SHEAVE - 18.0 O.D. X 7/8 ROPE GROOVE	COMMERCIAL	65
10.00	4	YMD-9971	SHEAVE - 12.0 O.D. X 7/8 ROPE GROOVE	COMMERCIAL	10
11.00	2	AMD-1223	ANTI TWO-BLOCK DEVICE	ASSEMBLY	25
12.00	1	YMD-8734	ROTARY ENCODER	COMMERCIAL	5
13.00	2	YMD-10310	FLOODLIGHT	COMMERCIAL	63
14.00	1	YMD-9719	BEACON	COMMERCIAL	7
15.00	1	YMD-8948	ANGLE SENSOR	COMMERCIAL	7
16.00	2	YMD-10269	WEDGE SOCKET - 7/8" WIRE ROPE	COMMERCIAL	22

OFFICIAL COPY - 01.17730.0038 - VDB004 - 1 - Approved(A) - - - 06-Jan-2010 06:03 PM

APPLETON MARINE, INC.

Code ID NO. 70433

PARTS LIST FOR:
CRANE ASSEMBLY
AMD-1973
Customer: SBM OFFSHORE GROUP

S.O. NO. 15940
B.M. SERIES 2

Date Run: 10/2/2009
Prep'd By: KEG

ITEM	*QTY*	*PART NO.*	*DESCRIPTION*	*MAT'L / VENDER*	*WT(LBS)*
17.00	2	YMD-10689	HYDRAULIC CYLINDER	COMMERCIAL	7500
18.00	1	YMD-10752	CONTROL VALVE MANIFOLD	COMMERCIAL	0
19.00	1	YMD-10721	CONTROL VALVE MANIFOLD	COMMERCIAL	0
20.00	1	DMD-3351	PEDESTAL	WELDMENT	11950
21.00	1	DMD-3350	TURRET	WELDMENT	25115
22.00	1	DMD-3340	MAIN BOOM	WELDMENT	36175
23.00	1	DMD-3342	EXTENSION BOOM	WELDMENT	19945
24.00	1	YMD-9730	ELECTRIC SLIPRING	COMMERCIAL	10
25.00	20	YMD-6033	GREASE FITTING	MONEL	0
26.00	174	YMD-10746	TURNTABLE BEARING STUD 1.500-6NC X 12.25 LG	GRADE 8 STEEL BLUE COATED	6
27.00	174	YMD-10545	HEX NUT 1.500-6NC	SAE GRADE 8 STL	1
28.00	174		SAE HARDENED FLATWASHER, 1.500" DIA	STEEL ZNC PLTD	
29.00			NOT USED		
30.00	1	MMD-4378	SHAFT	AISI 316 STN STL	2
31.00	1	GMD-0283	GEAR	NYLON	1
32.00	1	GMD-0269	GEAR	NYLON	6

OFFICIAL COPY - 01.17730.0038 - VDB004 - 1 - Approved(A) - - - 06-Jan-2010 06:03 PM

APPLETON MARINE, INC.

Code ID NO. 70433

PARTS LIST FOR:
CRANE ASSEMBLY
AMD-1973
Customer: SBM OFFSHORE GROUP

S.O. NO. 15940
B.M. SERIES 2

Date Run: 10/2/2009
Prep'd By: KEG

ITEM	*QTY*	*PART NO.*	*DESCRIPTION*	*MAT'L / VENDER*	*WT(LBS)*
33.00	1	GMD-0271	PINION	NYLON	2
34.00	1	JMD-1646	ENCODER GUARD	HRS-LC	15
35.00	1		BUSHING BUNTING P/N: FF-512-2	BRONZE	
36.00	2		BUSHING BUNTING P/N: EF162212	BRONZE	
37.00	1		KEY, 3/32" SQUARE X .75 LG	AISI-1018 CDS	
38.00	1		KEY, 3/16" SQUARE X .75 LG	AISI-1018 CDS	
39.00	1		SET SCREW, #10-32 UNF X .38 LG	AISI 316 STN STL	
40.00	1		SET SCREW, #4-40 UNF X .13 LG MCMASTER CARR P/N: 92313A103	AISI 316 STN STL	
41.00	1	JMD-1166	BRACKET, ANGLE DECAL	WELDMENT	8
42.00	1	DMD-2422	DECAL - BOOM ANGLE	COMMERCIAL	0
43.00	1	JMD-1701	GEAR GUARD	WELDMENT	280
44.00	1	DMD-3368	PLATFORM SUPPORTS	WELDMENT	1548
45.00	1	DMD-3369	PLATFORM	WELDMENT	1965
46.00	1	DMD-3450	WINCH PLATFORM	WELDMENT	925
47.00	1	DMD-3205	ACCESS PLATFORM	WELDMENT	335
48.00	1	JMD-1795	LADDER	WELDMENT	128

OFFICIAL COPY - 01.17730.0038 - VDB004 - 1 - Approved(A) - - - 06-Jan-2010 06:03 PM

APPLETON MARINE, INC.

Code ID NO. 70433

PARTS LIST FOR:
CRANE ASSEMBLY
AMD-1973
Customer: SBM OFFSHORE GROUP

S.O. NO. 15940
B.M. SERIES 2

Date Run: 10/2/2009
Prep'd By: KEG

ITEM	*QTY*	*PART NO.*	*DESCRIPTION*	*MAT'L / VENDER*	*WT(LBS)*
49.00	1	JMD-1796	LADDER CAGE	WELDMENT	68
50.00	1	JMD-1908	LADDER	WELDMENT	136
51.00	1	JMD-1909	LADDER CAGE	WELDMENT	80
52.00	21	MMD-4526	STANCHION (LH)	ASTM A36	9
53.00	21	MMD-4525	STANCHION (RH)	ASTM A36	9
54.00	2	MMD-4148	PIN 9.0 DIA - MAIN BOOM HEEL	NIKROME 302	225
55.00	4	MMD-4836	TEST PIN	STN STL 17-4 PH	60
56.00	40	MMD-4163	TOE BOARD	HRS-LC	15
57.00	1	AMD-0699	BOOM ANGLE INDICATOR	ASSEMBLY	4
58.00	3	MMD-4723	PIN - HEADBOX	17-4 STN STL	23
59.00	10	WMD-1100	THRUSTWASHER 3.06 ID X 5.0 OD X .13 THK	BRONZE	1
60.00	4	JMD-1140	BRACKET - ROPE GUIDE SHEAVE	WELDMENT	70
61.00	8	WMD-0600	THRUSTWASHER	BRONZE	1
62.00	4	WMD-1155	PIN 1.5 DIA	STN STL 17-4 PH	2
63.00	16	WMD-1037	LOCKPLATE	STN STL AISI-304	1
64.00	1	JMD-1203	BRACKET - HOSE STORAGE	WELDMENT	12

OFFICIAL COPY - 01.17730.0038 - VDB004 - 1 - Approved(A) - - - 06-Jan-2010 06:03 PM

APPLETON MARINE, INC.

Code ID NO. 70433

PARTS LIST FOR:
CRANE ASSEMBLY
AMD-1973
Customer: SBM OFFSHORE GROUP

S.O. NO. 15940
B.M. SERIES 2

Date Run: 10/2/2009
Prep'd By: KEG

ITEM	*QTY*	*PART NO.*	*DESCRIPTION*	*MAT'L / VENDER*	*WT(LBS)*
65.00	4	MMD-4160	BUSHING 9.0 I.D. X 9.5 O.D. X 2.25 LG	BRONZE	5
66.00	4	MMD-4172	THRUSTWASHER 9.0 DIA	BRONZE	6
67.00	4		SNAPRING SMALLEY P/N: WSM-900-S16	AISI 316 STN STL	
68.00	2	MMD-3736	LOCKPLATE - HEEL PIN	WELDMENT	45
69.00	4	MMD-3738	LOCKPLATE - CYLINDER PIN	WELDMENT	10
70.00	1	MMD-4169	BRACKET	ASTM A36	66
71.00	1	MMD-4170	SLIPRING GUIDE	ASTM A36	1
72.00	1	JMD-1651	SLIP RING BRACKET	ASTM A36	46
73.00	1	JMD-1765	COVER	WELDMENT	48
74.00	1	JMD-1766	GASKET	NEOPRENE	1
75.00	4	MMD-4694	THRUSTWASHER 5.56 I.D. X 10.5 O.D. X .19 THK	BRONZE ASTM-B505 C93200	4
76.00	4	MMD-4693	PULL-IN THRUSTWASHER	BRONZE ASTM B505 C932	5
77.00	1	YMD-9459	SAFETY CHAIN ASSEMBLY 3 FT OF CHAIN	COMMERCIAL	2
78.00	5 SHTS		GRATING - 1.0" YELLOW DURADEK #I-6010 5' X 12' SHEETS	FIBERGLASS	
79.00	30		SADDLE CLIP DURADEK #CP-050-0010	AISI 316 STN STL	
80.00	8		CABLE, .375 DIA X 60 FT 7 X 19 STRAND CORE	STN STL	

OFFICIAL COPY - 01.17730.0038 - VDB004 - 1 - Approved(A) - - - 06-Jan-2010 06:03 PM

APPLETON MARINE, INC.

Code ID NO. 70433

PARTS LIST FOR:
CRANE ASSEMBLY
AMD-1973
Customer: SBM OFFSHORE GROUP

S.O. NO. 15940
B.M. SERIES 2

Date Run: 10/2/2009
Prep'd By: KEG

ITEM	*QTY*	*PART NO.*	*DESCRIPTION*	*MAT'L / VENDER*	*WT(LBS)*
81.00	4		TURNBUCKLE MCMASTER CARR #3022T54	AISI 316 STN STL	
82.00	4		ANCHOR SHACKLE W/ LOOSE PIN MCMASTER CARR #3859T57	AISI 316 STN STL	
83.00	16		ROPE THIMBLE, .375 WIRE ROPE MCMASTER CARR #3495T54	AISI 316 STN STL	
84.00	84		BUSHINGS MCMASTER CARR #9307K59	BUNA-N RUBBER	
85.00	32		WIRE ROPE CLIP, .375 WIRE ROPE MCMASTER CARR #8913T15	AISI 316 STN STL	
86.00	2	MMD-4538	FLOODLIGHT BOOM MOUNT	WELDMENT	12
87.00	2	MMD-4537	LIGHT BRACKET	WELDMENT	15
88.00	2		HEX NYLON-INSERT LOCKNUT 1.500-6NC	GRADE 2 STL ZNC PLTD	
89.00	4		FLATWASHER, 1.5 DIA	STEEL ZNC PLTD	
90.00	28	YMD-10322	BOOM SPLICE BOLT 2.000-4.5NC X 10.5 LG	GRADE 8 STEEL	10
91.00	28	YMD-10323	HEX NUT 2.000-4.5NC	GRADE 8 STEEL	1
92.00	28		SAE HARDENED FLATWASHER 2.0" DIA	STEEL ZNC PLTD	
93.00	6	YMD-10560	GASKET - SAE "C" 4-BOLT	COMMERCIAL	0
94.00	1	JMD-1684	STROBE LIGHT BRACKET	WELDMENT	10
95.00	1	YMD-9837	SAFETY HARNESS WITH LANYARD	COMMERCIAL	5
96.00	55 FT		CABLE, 1/2" DIA, 6 X 19 CLASS IWRC CORE MCMASTER CARR #8908T58 (2 PIECES AT 55 FT EACH)	AISI 316 STN STL	

OFFICIAL COPY - 01.17730.0038 - VDB004 - 1 - Approved(A) - - - 06-Jan-2010 06:03 PM

APPLETON MARINE, INC.

Code ID NO. 70433

PARTS LIST FOR:
CRANE ASSEMBLY
AMD-1973
Customer: SBM OFFSHORE GROUP

S.O. NO. 15940
B.M. SERIES 2

Date Run: 10/2/2009
Prep'd By: KEG

ITEM	*QTY*	*PART NO.*	*DESCRIPTION*	*MAT'L / VENDER*	*WT(LBS)*
97.00	2		1/2" CABLE QUICK ATTACHMENT, JAW END SUNCOR #S0762-0013	AISI 316 STN STL	
98.00	2		1/2" CABLE QUICK ATTACHMENT, EYE END SUNCOR #S0761-0013	AISI 316 STN STL	
99.00	2		TURNBUCKLE, JAW & JAW END SUNCOR #S0101-0016	AISI 316 STN STL	
100.00	1	YMD-8524	HOSE ASSEMBLY (S.S.) .25 I.D. X 113" LG MIDDLE SHEAVE TO TOE BOARD	COMMERCIAL	0
101.00	1	YMD-8524	HOSE ASSEMBLY (S.S.) .25 I.D. X 77" LG UPPER SHEAVE TO TOE BOARD	COMMERCIAL	0
102.00	1	YMD-8524	HOSE ASSEMBLY (S.S.) .25 I.D. X 150" LG LOWER SHEAVE TO TOE BOARD	COMMERCIAL	0
103.00	3	2705-02-04-SS	FEMALE BULKHEAD CONNECTOR	BRENNAN IND.	0
104.00	3	6500-04-04-SS	SWIVEL NUT ELBOW	BRENNAN IND.	0
105.00	3	2501-04-02-SS	MALE ELBOW	BRENNAN IND.	0
106.00	1	NMD-1390	LOAD PIN - MAIN FALL	COMMERCIAL	16
107.00	1	NMD-1391	LOAD PIN - AUX FALL	COMMERCIAL	16
108.00	1	YMD-10168	EMERGENCY LIGHTING FIXTURE	COMMERCIAL	22
109.00	1	AMD-2013	MAIN WINCH ASSEMBLY	BM SERIES 07	2415
110.00	1	AMD-2007	AUX WINCH ASSEMBLY	BM SERIES 08	2150
111.00	1	YMD-10747	COMBINATION BEACON SOUNDER UNIT	COMMERCIAL	20
112.00	1	YMD-9937	HAZARDOUS AREA WARNING BEACON	COMMERCIAL	6

OFFICIAL COPY - 01.17730.0038 - VDB004 - 1 - Approved(A) - - - 06-Jan-2010 06:03 PM

APPLETON MARINE, INC.

Code ID NO. 70433

PARTS LIST FOR:
CRANE ASSEMBLY
AMD-1973
Customer: SBM OFFSHORE GROUP

S.O. NO. 15940
B.M. SERIES 2

Date Run: 10/2/2009
Prep'd By: KEG

ITEM	*QTY*	*PART NO.*	*DESCRIPTION*	*MAT'L / VENDER*	*WT(LBS)*
113.00	1	YMD-9197	HAZARDOUS AREA LOUD SPEAKER	COMMERCIAL	10
114.00	1	JMD-1735	BRACKET - HOSE	ASTM A36	36
115.00	4	2404-04-02-SS	MALE CONNECTOR	BRENNAN IND.	0
116.00	4	6500-04-04-SS	SWIVEL NUT ELBOW	BRENNAN IND.	0
117.00	4	2501-04-02-SS	MALE ELBOW	BRENNAN IND.	0
118.00	4		ADJUSTABLE 180° FLANGE MCMASTER CARR #4936T64	COMMERCIAL	
119.00	2		1.0" SCH 40 PIPE X 60.0 LG	STEEL	
120.00	40 FT		SEAMLESS HYDRAULIC TUBING .25 DIA X .028 WALL	AISI A213 316 STN STL	
121.00	16	0318-04-SS	TUBE NUT	BRENNAN IND.	0
122.00	16	0319-04-SS	TUBE SLEEVE	BRENNAN IND.	0
123.00	1	MMD-4446	BRACKET - DOOR STOP	AISI 316 STN STL	1
124.00	1		DOOR STOP / HATCH HOLDER MCMASTER CARR #12975A35	COMMERCIAL	
125.00	2		U-BOLT, FOR 1.0" NOM PIPE MCMASTER CARR #29605T3	AISI 316 STN STL	
126.00	1	JMD-1900	LADDER	WELDMENT	26
127.00	2		BUTT HINGE MCMASTER CARR #1624A91	304 STN STL	
128.00	1		PULL HANDLE MCMASTER CARR #1435A25	304 STN STL	

OFFICIAL COPY - 01.17730.0038 - VDB004 - 1 - Approved(A) - - - 06-Jan-2010 06:03 PM

APPLETON MARINE, INC.

Code ID NO. 70433

PARTS LIST FOR:
CRANE ASSEMBLY
AMD-1973
Customer: SBM OFFSHORE GROUP

S.O. NO. 15940
B.M. SERIES 2

Date Run: 10/2/2009
Prep'd By: KEG

ITEM	*QTY*	*PART NO.*	*DESCRIPTION*	*MAT'L / VENDER*	*WT(LBS)*
129.00	1	MMD-4786	SLIP RING JUNCTION BOX MOUNTING PLATE	ASTM A36	24
130.00	2	MMD-4787	SLIP RING JUNCTION BOX SUPPORT	ASTM 36	15
131.00	4	NMD-1478	DECAL - TAG NUMBERS	VINYLE	0
132.00	1	JMD-1921	ROPE GUARD	WELDMENT	148
133.00	1	JMD-1922	ROPE GUARD	ASTM A36	68
134.00	1	JMD-1923	ROPE GUARD	WELDMENT	45
135.00	1	JMD-1924	ROPE GUARD	ASTM A36	33
136.00	1	MMD-4869	ROLLER	CARBON STEEL	56
137.00	2	MMD-4797	ROLLER 13.75" LG	NYLATRON	4
138.00	1	MMD-4796	ROLLER 23.63" LG	NYLATRON	7
139.00	1	MMD-4795	ROLLER 38.75" LG	NYLATRON	12
140.00	1	MMD-4794	ROLLER 40.25" LG	NYLATRON	12
141.00	1	MMD-4799	PIN	ASTM A564 STN STL	0
142.00	12 FT		1.0" ROUND BAR X 12 FT LG	AISI 304 STN STL	
143.00	10		COTTER PIN .19 X 2.0" LG	18-8 STN STL	
144.00	2	MMD-1453	LOCKPLATE	AISI 304 STN STL	0

OFFICIAL COPY - 01.17730.0038 - VDB004 - 1 - Approved(A) - - - 06-Jan-2010 06:03 PM

APPLETON MARINE, INC.

Code ID NO. 70433

PARTS LIST FOR:
CRANE ASSEMBLY
AMD-1973
Customer: SBM OFFSHORE GROUP

S.O. NO. 15940
B.M. SERIES 2

Date Run: 10/2/2009
Prep'd By: KEG

ITEM	*QTY*	*PART NO.*	*DESCRIPTION*	*MAT'L / VENDER*	*WT(LBS)*
145.00	2	MMD-4309	SPACER-SHEAVE BRACKET	ASTM A36	15
146.00	2	MMD-4764	SPACER SHEAVE BRACKET	ASTM A36	13
147.00	1	YMD-10850	HYDRAULIC SWIVEL	COMMERCIAL	229
148.00	2	MMD-4807	SWIVEL BRACKET - BOOM	WELDMENT	10
149.00	2	MMD-4808	SWIVEL BRACKET - TURRET	WELDMENT	7
150.00	33		HHCS, .750-10NC X 2.5 LG	GRADE 8 STL ZNC PLTD	
151.00	33		HARDENED FLATWASHER, .750 DIA	STEEL ZNC PLTD	
152.00	8		HHCS, 1.250-7NC X 4.0 LG	GRADE 5 STL ZNC PLTD	
153.00	16		HARDENED FLATWASHER, 1.250 DIA	STEEL ZNC PLTD	
154.00	8		HEX NUT, 1.250-7NC	GRADE 5 STL ZNC PLTD	
155.00	26		HHCS, .750-10NC X 2.75 LG	GRADE 5 STL ZNC PLTD	
156.00	16		HHCS, .750-10NC X 2.0 LG	GRADE 5 STL ZNC PLTD	
157.00	42		HARDENED FLATWASHER, .750 DIA	STEEL ZNC PLTD	
158.00	26		BEVEL WASHER, .750 DIA	STEEL ZNC PLTD	
159.00	12		THREADED ROD .50-13NC X 7.0 LG	GRADE B7 STL ZNC PLTD	
160.00	12		HARDENED FLATWASHER, .500 DIA	STEEL ZNC PLTD	

OFFICIAL COPY - 01.17730.0038 - VDB004 - 1 - Approved(A) - - - 06-Jan-2010 06:03 PM

APPLETON MARINE, INC.

Code ID NO. 70433

PARTS LIST FOR:
CRANE ASSEMBLY
AMD-1973
Customer: SBM OFFSHORE GROUP

S.O. NO. 15940
B.M. SERIES 2

Date Run: 10/2/2009
Prep'd By: KEG

ITEM	*QTY*	*PART NO.*	*DESCRIPTION*	*MAT'L / VENDER*	*WT(LBS)*
161.00	5		HHCS, .750-10NC X 2.25 LG	AISI 316 STN STL	
162.00	6		HHCS, .750-10NC X 1.5 LG	AISI 316 STN STL	
163.00	4		HHCS, .750-10NC X 1.25 LG	AISI 316 STN STL	
164.00	15		LOCKWASHER, .750 DIA	AISI 316 STN STL	
165.00	16		HHCS, .625-11NC X 2.0 LG	AISI 316 STN STL	
166.00	4		HHCS, .625-11NC X 1.75 LG	AISI 316 STN STL	
167.00	4		HHCS, .625-11NC X 1.5 LG	AISI 316 STN STL	
168.00	24		LOCKWASHER, .625 DIA	AISI 316 STN STL	
169.00	6		HEX NUT, .625-11NC	AISI 316 STN STL	
170.00	2		HHCS, .500-13NC X 2.5 LG	AISI 316 STN STL	
171.00	52		HHCS, .500-13NC X 2.0 LG	AISI 316 STN STL	
172.00	128		HHCS, .500-13NC X 1.5 LG	AISI 316 STN STL	
173.00	37		HHCS, .500-13NC X 1.25 LG	AISI 316 STN STL	
174.00	28		HHCS, .500-13NC X 1.0 LG	AISI 316 STN STL	
175.00	247		LOCKWASHER, .500 DIA	AISI 316 STN STL	
176.00	161		HEX NUT, .500-13 NC	AISI 316 STN STL	

OFFICIAL COPY - 01.17730.0038 - VDB004 - 1 - Approved(A) - - - 06-Jan-2010 06:03 PM

APPLETON MARINE, INC.

Code ID NO. 70433

PARTS LIST FOR:
CRANE ASSEMBLY
AMD-1973
Customer: SBM OFFSHORE GROUP

S.O. NO. 15940
B.M. SERIES 2

Date Run: 10/2/2009
Prep'd By: KEG

ITEM	*QTY*	*PART NO.*	*DESCRIPTION*	*MAT'L / VENDER*	*WT(LBS)*
177.00	30		HHCS, .375-16NC X 1.5LG	AISI 316 STN STL	
178.00	20		HHCS, .375-16NC X 1.25 LG	AISI 316 STN STL	
179.00	38		HHCS, .375-16NC X 1.0 LG	AISI 316 STN STL	
180.00	98		LOCKWASHER, .375 DIA	AISI 316 STN STL	
181.00	28		FLATWASHER, .375 DIA	AISI 316 STN STL	
182.00	34		HEX NUT, .375-16NC	AISI 316 STN STL	
183.00	4		HHCS, .313-18NC X 1.5 LG	AISI 316 STN STL	
184.00	12		HHCS, .313-18NC X 1.0 LG	AISI 316 STN STL	
185.00	24		HHCS, .313-18 N.C. X .63 LG	AISI 316 STN STL	
186.00	40		LOCKWASHER, .313 DIA	AISI 316 STN STL	
187.00	3		HHCS, .250-20NC X 1.25 LG	AISI 316 STN STL	
188.00	42		HHCS .250-20 N.C. X 1.0 LG	AISI 316 STN STL	
189.00	3		HHCS, .250-20 N.C. X .63 LG	AISI 316 STN STL	
190.00	48		LOCKWASHER, .250 DIA	AISI 316 STN STL	
191.00	6		HEX NUT, .250-20NC	AISI 316 STN STL	
192.00	4		SHCS #10-24 N.C. X .75 LG	AISI 316 STN STL	

OFFICIAL COPY - 01.17730.0038 - VDB004 - 1 - Approved(A) - - - 06-Jan-2010 06:03 PM

APPLETON MARINE, INC.

Code ID NO. 70433

PARTS LIST FOR:
CRANE ASSEMBLY
AMD-1973
Customer: SBM OFFSHORE GROUP

S.O. NO. 15940
B.M. SERIES 2

Date Run: 10/2/2009
Prep'd By: KEG

ITEM	*QTY*	*PART NO.*	*DESCRIPTION*	*MAT'L / VENDER*	*WT(LBS)*
193.00	4		LOCKWASHER, #10 DIA	AISI 316 STN STL	
194.00	4		EYEBOLT W/SHOULDER - .50 MCMASTER #8891T79	AISI 316 STN STL	
195.00	2		WELD STUD, .375-16NC X 1.5 LG	AISI 316 STN STL	
196.00	6 FT		THREADED ROD, .375-16NC	AISI 316 STN STL	
197.00	6 FT		SEAMLESS HYDRAULIC TUBING .500 DIA X .035 WALL	AISI 316 STN STL	
198.00	1		HEX NUT, .750-10NC	AISI 316 STN STL	
199.00	2	NMD-1126	DECAL - APPLETON (BLACK - 12.5 X 108)	VINYL	0
200.00	2	NMD-1442	DECAL - SWL	VINYL	0
201.00	1	NMD-1201	DECAL - HYDRAULIC OIL LEVEL	VINYL	0
202.00	2	NMD-1152	DECAL - CONTROL VALVE OVERRIDE	VINYL	0
203.00	1	NMD-0594	DECAL - BATTERY CHARGER	SEE NOTES	0
204.00	1	MMD-4821	SWITCH MOUNTING PLATE	ASTM A36	2
205.00	1	NMD-1444	DECAL - EQUIPMENT TAGS	VINYL	0
206.00	2		FLATWASHER, .313 DIA	AISI 316 STN STL	
207.00	2		HEX NUT, .313-18NC	AISI 316 STN STL	
208.00	9		HHCS .75-10NC X 1.0 LG	AISI 316 STN STL	

OFFICIAL COPY - 01.17730.0038 - VDB004 - 1 - Approved(A) - - - 06-Jan-2010 06:03 PM

APPLETON MARINE, INC.

Code ID NO. 70433

PARTS LIST FOR:
CRANE ASSEMBLY
AMD-1973
Customer: SBM OFFSHORE GROUP

S.O. NO. 15940
B.M. SERIES 2

Date Run: 10/2/2009
Prep'd By: KEG

ITEM	*QTY*	*PART NO.*	*DESCRIPTION*	*MAT'L / VENDER*	*WT(LBS)*
209.00	8		HHCS, 1.250-7NC X 3.0 LG	GRADE 5 STL ZNC PLTD	
210.00	2 EA		BEARING INNER RACE: MCGILL-MI-32 OUTER RACE: MCGILL-MI-40-SS	COMMERCIAL	
211.00	3	MMD-4845	SHIM	AISI 304 STN STL	3
212.00	20 FT	YMD-10406	CABLE TRAY - 6"	COMMERCIAL	0
213.00	5 FT	YMD-10407	CABLE TRAY - LADDER STYLE	COMMERCIAL	0
214.00	6		CABLE TRAY SUPPORT BRACKET COOPER B-LINE: B409-9	COMMERCIAL	
215.00	12		HEX NUT .50-13NC	GRADE 5 STL ZNC PLTD	

OFFICIAL COPY - 01.17730.0038 - VDB004 - 1 - Approved(A) - - - 06-Jan-2010 06:03 PM

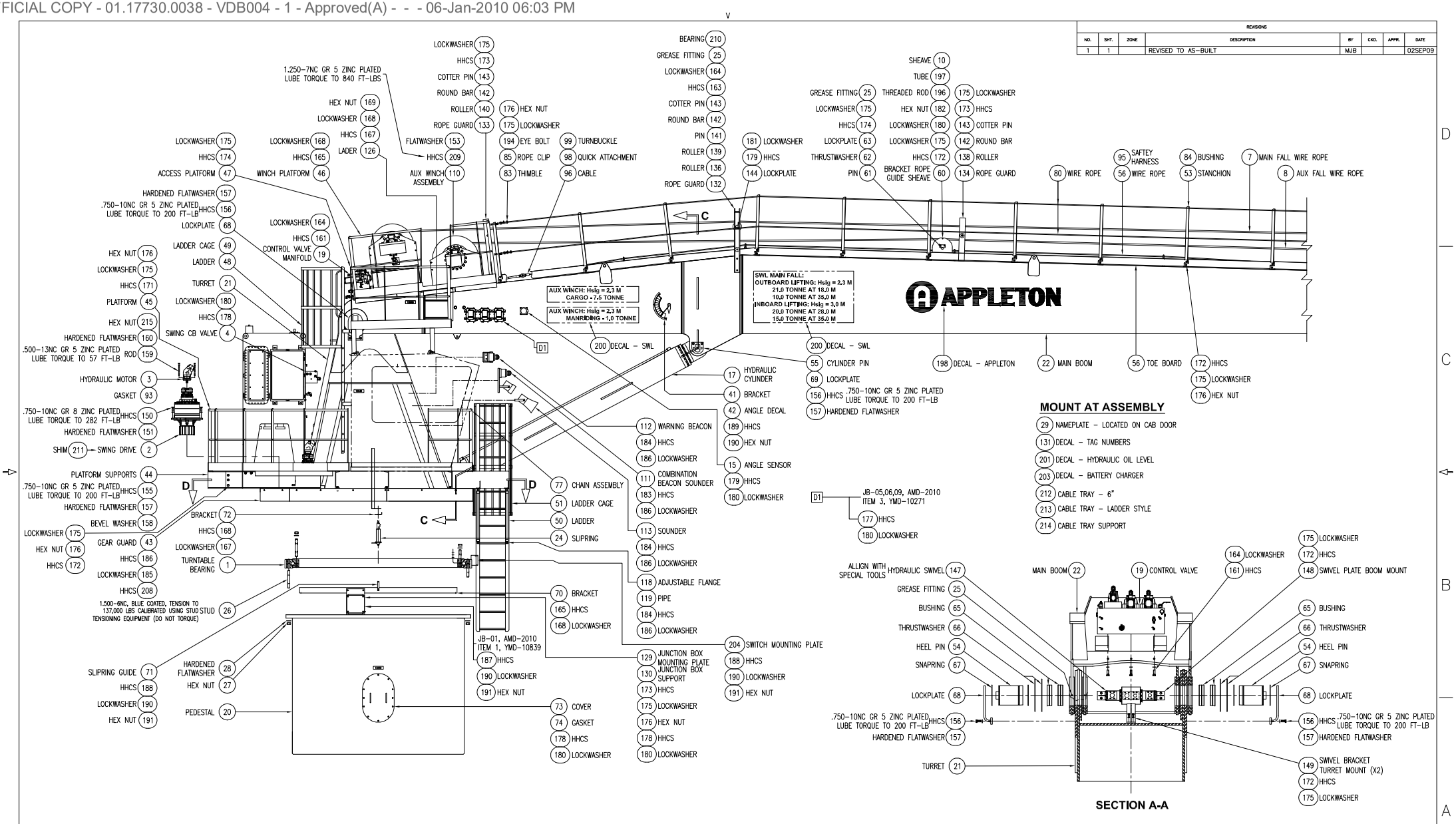
APPLETON
SWL MAIN FALL:
OUTBOARD LIFTING: Hsig = 2,3 M
21,0 TONNE AT 18,0 M
10,0 TONNE AT 35,0 M
INBOARD LIFTING: Hsig = 3,0 M
20,0 TONNE AT 28,0 M
15,0 TONNE AT 35,0 M
AUX WINCH: Hsig = 2,3 M
CARGO - 7.5 TONNE
AUX WINCH: Hsig = 2,3 M
MANRIDING - 1,0 TONNE
MOUNT AT ASSEMBLY
29 NAMEPLATE – LOCATED ON CAB DOOR
131 DECAL – TAG NUMBERS
201 DECAL – HYDRAULIC OIL LEVEL
203 DECAL – BATTERY CHARGER
212 CABLE TRAY – 6"
213 CABLE TRAY – LADDER STYLE
214 CABLE TRAY SUPPORT
SECTION A-A
1.250–7NC GR 5 ZINC PLATED LUBE TORQUE TO 840 FT–LBS
.750–10NC GR 5 ZINC PLATED LUBE TORQUE TO 200 FT–LB
.500–13NC GR 5 ZINC PLATED LUBE TORQUE TO 57 FT–LB
.750–10NC GR 8 ZINC PLATED LUBE TORQUE TO 282 FT–LB
1.500–6NC, BLUE COATED, TENSION TO 137,000 LBS CALIBRATED USING STUD STUD TENSIONING EQUIPMENT (DO NOT TORQUE)
JB–01, AMD–2010 ITEM 1, YMD–10839
JB–05,06,09, AMD–2010 ITEM 3, YMD–10271
ACCESS PLATFORM 47
WINCH PLATFORM 46
AUX WINCH ASSEMBLY 110
LADER 126
CONTROL VALVE MANIFOLD 19
LADDER CAGE 49
LADDER 48
TURRET 21
PLATFORM 45
SWING CB VALVE 4
HYDRAULIC MOTOR 3
GASKET 93
ROD 159
SHIM 211
SWING DRIVE 2
PLATFORM SUPPORTS 44
BRACKET 72
GEAR GUARD 43
TURNTABLE BEARING 1
PEDESTAL 20
SLIPRING GUIDE 71
HARDENED FLATWASHER 28
HEX NUT 27
STUD 26
BEVEL WASHER 158
HARDENED FLATWASHER 157
HARDENED FLATWASHER 160
LOCKPLATE 68
HHCS 156
HHCS 150
HARDENED FLATWASHER 151
HHCS 155
HHCS 209
HHCS 167
HHCS 168
HHCS 161
HHCS 178
HHCS 171
HHCS 174
HHCS 165
HHCS 173
HHCS 186
HHCS 208
HHCS 188
HHCS 172
HHCS 163
HHCS 174
HHCS 180
HHCS 175
HHCS 184
HHCS 186
HHCS 183
HHCS 186
HHCS 184
HHCS 186
HHCS 165
HHCS 168
HHCS 187
HHCS 188
HHCS 175
HHCS 178
HHCS 180
HHCS 189
HHCS 179
HHCS 172
HHCS 175
HHCS 172
HHCS 175
HHCS 179
HHCS 144
HHCS 143
HHCS 173
HHCS 156
HHCS 157
HHCS 180
HHCS 177
HHCS 148
HHCS 172
HHCS 175
HHCS 156
HHCS 157
HHCS 175
HHCS 176
HHCS 178
HHCS 180
HHCS 190
HHCS 188
HHCS 173
HHCS 175
HHCS 176
HHCS 178
HHCS 180
HHCS 190
HHCS 165
HHCS 168
HHCS 186
HHCS 184
HHCS 186
HHCS 190
HHCS 189
HHCS 179
HHCS 180
HHCS 190
HHCS 188
HHCS 190
HHCS 190
HHCS 190

OFFICIAL COPY - 01.17730.0038 - VDB004 - 1 - Approved(A) - - - 06-Jan-2010 06:03 PM

REVISIONS							
NO.	SHT.	ZONE	DESCRIPTION	BY	CKD.	APPR.	DATE
1	2		REVISED TO AS-BUILT	MJB			02SEP09

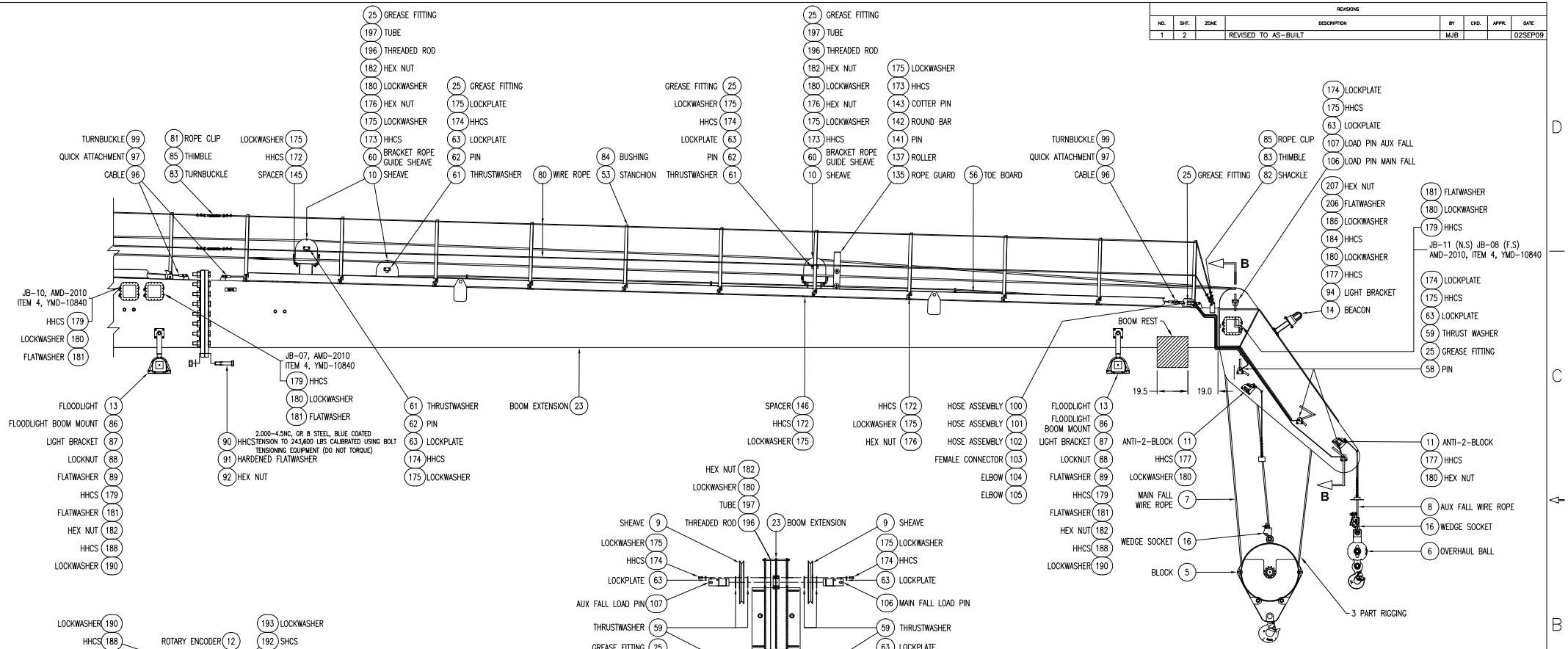

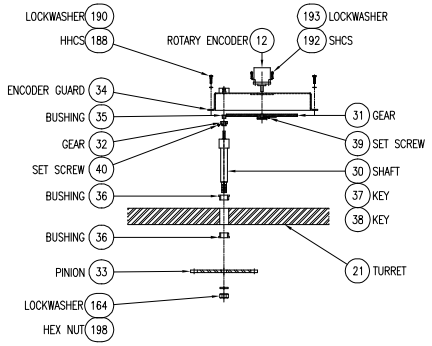

SECTION E-E

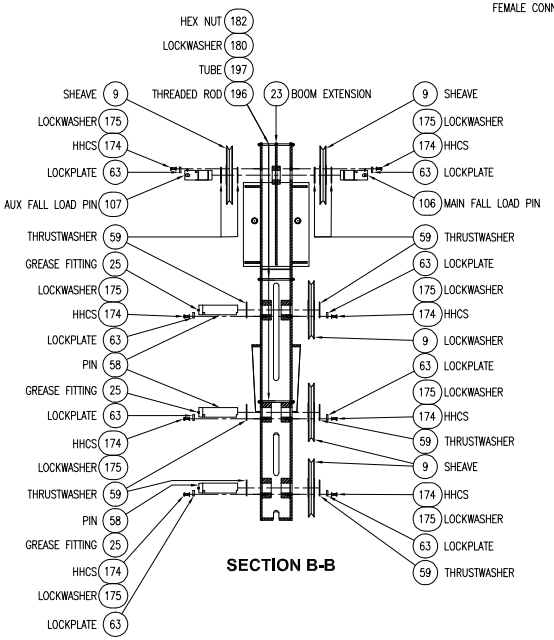

SECTION B-B

REFERENCE 15940

TOLERANCES UNLESS OTHERWISE SPECIFIED			
.X ± .030			
.XX ± .015			
.XXX ± .005			
WELDMENTS ± .06			
CHAMFERS .06 X 45°			
ANGLES ± 1°			
BREAK ALL SHARP EDGES			
MATERIAL: ASSEMBLY			
DRAWN	JJZ	02APR09	
CHECKED	MJB	29APR09	
APPROVED	KEG	29APR09	

APPLETON MARINE, INC.

CRANE ASSEMBLY

SIZE	CODE IDENT. NO.	DRAWING NO.	REV.
D	70433	AMD-1973	1

SCALE 1:30 | EST. WEIGHT 129,500 LBS | SHEET 2 OF 3

OFFICIAL COPY - 01.17730.0038 - VDB004 - 1 - Approved(A) - - - 06-Jan-2010 06:03 PM

REVISIONS						
NO.	SHT.	ZONE	DESCRIPTION	BY	CKD.	APPR.	DATE
1	3		REVISED TO AS-BUILT	MJB			02SEP09

HEX NUT 28
HARDENED FLATWASHER 27
1.500-6NC, BLUE COATED, TENSION TO 137,000 LBS CALIBRATED USING STUD TENSIONING EQUIPMENT (DO NOT TORQUE) STUD 26
LOCKWASHER 180 LOCKWASHER 175
HHCS 178 HHCS 172
SWING COUNTERBALANCE VALVE 4 HOSE BRACKET 114
HEX NUT 176
LOCKWASHER 175
HHCS 171
PLATFORM 45
CONTROL MANIFOLD 18
HHCS 162
LOCKWASHER 164
DECAL - VALVE OVERRIDE 202
TURRET 21
GRATING 78
SADDLE CLIP 79
HHCS 188
LOCKWASHER 190
AMD-2001 POWER UNIT ASSEMBLY
ENCODER 12
HYDRAULIC MOTOR 3
GASKET 93
HHCS 159
HARDENED FLATWASHER 160
SWING DRIVE 2
.750-10NC GR 8 ZINC PLATED LUBE TORQUE TO 282 FT-LB HHCS 150
HARDENED FLATWASHER 151
DECAL - VALVE OVERRIDE 202
LOCKWASHER 164
HHCS 161
CONTROL VALVE MANIFOLD 19
180 LOCKWASHER
177 HHCS
JB-03, AMD-2010 ITEM 2, YMD-10841
190 LOCKWASHER
187 HHCS
64 HOSE BRACKET
154 HEX NUT
153 HARDENED FLATWASHER
152 HHCS 1.250-7NC GR 5 ZINC PLATED LUBE TORQUE TO 840 FT-LB
109 MAIN WINCH ASSEMBLY
175 LOCKWASHER
173 HHCS
143 COTTER PIN
142 ROUND BAR
140 ROLLER
133 ROPE GUARD
168 LOCKWASHER
165 HHCS
46 WINCH PLATFORM
99 TURNBUCKLE
97 QUICK ATTACHMENT
96 CABLE
56 TOE BOARD
MAIN FALL WIRE ROPE 7
8 AUX FALL WIRE ROPE
25 GREASE FITTING
197 TUBE
196 THREADED ROD
182 HEX NUT
180 LOCKWASHER
176 HEX NUT
175 LOCKWASHER
173 HHCS
60 BRACKET ROPE GUARD
10 SHEAVE
56 TOE BOARD
22 MAIN BOOM
176 HEX NUT
175 LOCKWASHER
172 HHCS
84 BUSHING
52 STANCHION
77 SAFTEY CHAIN ASSEMBLY
50 LADDER
51 LADDER CAGE
172 HHCS
175 LOCKWASHER
176 HEX NUT
177 HHCS
180 LOCKWASHER
182 HEX NUT
47 ACCESS PLATFORM
174 HHCS
175 LOCKWASHER
108 EMERGENCY LIGHTING
132 ROPE GUARD
136 ROLLER
139 ROLLER
141 PIN
142 ROUND BAR
143 COTTER PIN
163 HHCS
164 LOCKWASHER
25 GREASE FITTING
144 LOCKPLATE
179 HHCS
181 LOCKWASHER
61 THRUSTWASHER
62 PIN
63 LOCKPLATE
174 HHCS
175 LOCKWASHER
56 TOE BOARD
53 STANCHION
84 BUSHING
172 HHCS
175 LOCKWASHER
176 HEX NUT
PLATFORM SUPPORTS 44
.750-10NC GR 5 ZINC PLATED LUBE TORQUE TO 200 FT-LB HHCS 155
HARDENED FLATWASHER 157
BEVEL WASHER 158
BRACKET DOOR STOP 123
DOOR STOP HATCH HOLDER 124
U-BOLT 125
48 LADDER
49 LADDER CAGE
170 HHCS
175 LOCKWASHER
176 HEX NUT
177 HHCS
180 LOCKWASHER
181 FLATWASHER
182 HEX NUT
195 WELD STUD
CAB ASSEMBLY AMD-2012
166 HHCS
168 HARDENED FLATWASHER
169 HEX NUT
MAIN BOOM 22
LOCKWASHER 180
HHCS 178
JUNCTION BOX BRACKET 130
LOCKWASHER 168
HHCS 167
SLIPRING BRACKET 72
HEX NUT 176
LOCKWASHER 175
HHCS 172
HEX NUT 176
LOCKWASHER 175
MOUNTING PLATE 129
BUTT HINGE 127
LOCKWASHER 168
HHCS 165
BRACKET 70
PULL HANDLE 128
HHCS 188
LOCKWASHER 190
SLIPRING GUIDE 71
HHCS 188
LOCKWASHER 190
HEX NUT 191
JB-02, AMD-2010 ITEM 1
187 HHCS
190 LOCKWASHER
191 HEX NUT
THRUSTWASHER 76
CYLINDER PIN 55
THRUSTWASHER 75
LOCKPLATE 69
.750-10NC GR 5 ZINC PLATED LUBE TORQUE TO 200 FT-LB HHCS 156
HARDENED FLATWASHER 157
76 PULL IN THRUSTWASHER
55 CYLINDER PIN
75 THRUSTWASHER
69 LOCKPLATE
156 HHCS .750-10NC GR 5 ZINC PLATED LUBE TORQUE TO 200 FT-LB
157 HARDENED FLATWASHER
122 SLEEVE
121 NUT
GREASE FITTING 25
120 TUBE
ELBOW 117
CONNECTOR 115
ELBOW 116
TURRET 21
PULL IN THRUSTWASHER 76
CYLINDER PIN 55
THRUSTWASHER 75
LOCKPLATE 69
.750-10NC GR 5 ZINC PLATED LUBE TORQUE TO 200 FT-LB HHCS 156
HARDENED FLATWASHER 157
17 HYDRAULIC CYLINDER
76 PULL IN THRUSTWASHER
55 CYLINDER PIN
75 THRUSTWASHER
69 LOCKPLATE
156 HHCS .750-10NC GR 5 ZINC PLATED LUBE TORQUE TO 200 FT-LB
157 HARDENED FLATWASHER
D2 JB-04, AMD-2010 ITEM 45, YMD-10249
177 HHCS
180 LOCKWASHER

TURNTABLE BEARING GREASE LINE DETAIL (4 LINES)

SECTION C-C

SECTION D-D

REFERENCE 15940

TOLERANCES UNLESS OTHERWISE SPECIFIED
.X ± .030
.XX ± .015
.XXX ± .005
WELDMENTS ± .06
CHAMFERS .06 X 45°
ANGLES ± 1°
BREAK ALL SHARP EDGES
MATERIAL ASSEMBLY

DRAWN	JJZ	02APR09
CHECKED	MJB	29APR09
APPROVED	KEG	29APR09

APPLETON MARINE, INC.

CRANE ASSEMBLY

SIZE	CODE IDENT. NO.	DRAWING NO.	REV.
D	70433	AMD-1973	1

SCALE 1:30 EST. WEIGHT 129,500 LBS SHEET 3 OF 3

OFFICIAL COPY - 01.17730.0038 - VDB004 - 1 - Approved(A) - - - 06-Jan-2010 06:03 PM

APPLETON MARINE, INC.

Code ID NO. 70433

PARTS LIST FOR:
PIPING ASSEMBLY
AMD-2009
Customer: SBM OFFSHORE GROUP

S.O. NO. 15940
B.M. SERIES 3

Date Run: 10/2/2009
Prep'd By: KEG

ITEM	*QTY*	*PART NO.*	*DESCRIPTION*	*MAT'L / VENDER*	*WT(LBS)*
1.00	2	YMD-9752	BALL VALVE - 4.0"	COMMERCIAL	24
2.00	2		4.0" BALL VALVE MOUNTING KIT MAIN P/N: MK510	COMMERCIAL	
3.00	1	YMD-9820	BALL VALVE - 1.5"	COMMERCIAL	8
4.00	1		1.5" BALL VALVE MOUNTING KIT MAIN P/N: MK505	COMMERCIAL	
5.00	9	YMD-10103	BALL VALVE - .75 NPT (SS)	COMMERCIAL	1
6.00			NOT USED		
7.00	4	YMD-6201	GAUGE SNUBBER	COMMERCIAL	0
8.00			NOT USED		
9.00			NOT USED		
10.00	4	13001-64-64K	SPLIT FLANGE KIT, 4" CODE 61	CLINTON	0
11.00	1	13001-40-40K	SPLIT FLANGE KIT, 2-1/2" CODE 61	CLINTON	0
12.00	5	13001-32-32K	SPLIT FLANGE KIT, 2" CODE 61	COMMERCIAL	0
13.00	15	16001-24-24K	SPLIT FLANGE KIT, 1-1/2" CODE 62	CLINTON	0
14.00	2	13001-24-24K	SPLIT FLANGE KIT, 1-1/2" CODE 61	CLINTON	0
15.00	20	16001-20-20K	SPLIT FLANGE KIT, 1-1/4" CODE 62	CLINTON	0
16.00	6		ADAPTER BLOCK, 1.0" CODE 62 TO #16 O-RING ANCHOR P/N: W48-16-16U WITH MOUNTING KIT	COMMERCIAL	0

OFFICIAL COPY - 01.17730.0038 - VDB004 - 1 - Approved(A) - - - 06-Jan-2010 06:03 PM

APPLETON MARINE, INC.

Code ID NO. 70433

PARTS LIST FOR:
PIPING ASSEMBLY
AMD-2009
Customer: SBM OFFSHORE GROUP

S.O. NO. 15940
B.M. SERIES 3

Date Run: 10/2/2009
Prep'd By: KEG

ITEM	*QTY*	*PART NO.*	*DESCRIPTION*	*MAT'L / VENDER*	*WT(LBS)*
17.00	1	13012-16-16K	ADAPTER KIT - SAE 1" CODE 61 TO #16 O-RING	CLINTON	0
18.00	1		BLANK FLANGE KIT, 1.5" CODE 62 ANCHOR P/N: W38-24-24U	COMMERCIAL	
19.00	1		BLANK FLANGE KIT, 2.0" CODE 61 ANCHOR P/N: W36-32-32U	COMMERCIAL	
20.00	1	YMD-9821	HOSE ASSEMBLY - 4.0" I.D. X 74" LG TANK TO SWING PUMP SUCTION	COMMERCIAL	15
21.00	1	YMD-9821	HOSE ASSEMBLY - 4.0" I.D. X 89" LG TANK TO SYSTEM PUMP SUCTION	COMMERCIAL	15
22.00	1	YMD-9423	HOSE ASSEMBLY - 2.0" X 142" LG SWING CONTROL VALVE TO RETURN FILTER	COMMERCIAL	15
23.00	1	YMD-9427	HOSE ASSEMBLY X 51" LG BOOM SWIVEL TO RETURN FILTER	COMMERCIAL	0
24.00	1	YMD-9627	HOSE ASSEMBLY - 1.5" I.D. X 69" LG TANK TO COOLING PUMP SUCTION	COMMERCIAL	0
25.00	1	YMD-8651	HOSE ASSEMBLY - 1.5" I.D. X 83" LG SWING PUMP TO CONTROL VALVE PRESSURE	COMMERCIAL	0
26.00	1	YMD-8651	HOSE ASSEMBLY - 1.5" I.D. X 184" LG SYSTEM PUMP TO BOOM SWIVEL	COMMERCIAL	0
27.00	1	YMD-8651	HOSE ASSEMBLY - 1.5" I.D. X 26 " LG SYSTEM CONTROL VALVE TO BOOM PIPING RAISE	COMMERCIAL	0
28.00	1	YMD-8651	HOSE ASSEMBLY - 1.5" I.D. X 26 " LG SYSTEM CONTROL VALVE TO BOOM PIPING LOWER	COMMERCIAL	0
29.00	1	YMD-9366	HOSE ASSEMBLY - 1.25 I.D X 53" LG SYSTEM CONTROL VALVE TO MAIN WINCH RAISE (RIGHT MOTOR)	COMMERCIAL	0
30.00	1	YMD-9366	HOSE ASSEMBLY - 1.25 I.D X 87" LG SYSTEM CONTROL VALVE TO MAIN WINCH RAISE (LEFT MOTOR)	COMMERCIAL	0
31.00	1	YMD-9366	HOSE ASSEMBLY - 1.25 I.D X 53" LG SYSTEM CONTROL VALVE TO MAIN WINCH LOWER (RIGHT MOTOR)	COMMERCIAL	0
32.00	1	YMD-9366	HOSE ASSEMBLY - 1.25 I.D X 87" LG SYSTEM CONTROL VALVE TO MAIN WINCH LOWER (LEFT MOTOR)	COMMERCIAL	0

OFFICIAL COPY - 01.17730.0038 - VDB004 - 1 - Approved(A) - - - 06-Jan-2010 06:03 PM

APPLETON MARINE, INC.

Code ID NO. 70433

PARTS LIST FOR:
PIPING ASSEMBLY
AMD-2009
Customer: SBM OFFSHORE GROUP

S.O. NO. 15940
B.M. SERIES 3

Date Run: 10/2/2009
Prep'd By: KEG

ITEM	*QTY*	*PART NO.*	*DESCRIPTION*	*MAT'L / VENDER*	*WT(LBS)*
33.00	1	YMD-9366	HOSE ASSEMBLY - 1.25 I.D X 88" LG SYSTEM CONTROL VALVE TO AUX WINCH RAISE	COMMERCIAL	0
34.00	1	YMD-9366	HOSE ASSEMBLY - 1.25 I.D X 88" LG SYSTEM CONTOL VALVE TO AUX WINCH LOWER	COMMERCIAL	0
35.00	1	YMD-9366	HOSE ASSEMBLY - 1.25 I.D X 59" LG BOOM PIPING TO LUFF CYLINDER EXTEND	COMMERCIAL	0
36.00	1	YMD-9366	HOSE ASSEMBLY - 1.25 I.D X 45" LG BOOM PIPING TO LUFF CYLINDER EXTEND	COMMERCIAL	0
37.00	1	YMD-9366	HOSE ASSEMBLY - 1.25 I.D X 59" LG BOOM PIPING TO LUFF CYLINDER RETRACT	COMMERCIAL	0
38.00	1	YMD-9366	HOSE ASSEMBLY - 1.25 I.D X 45" LG BOOM PIPING TO LUFF CYLINDER RETRACT	COMMERCIAL	0
39.00	1	YMD-8529	HOSE ASSEMBLY (S.S.) 1.0" I.D. X 157" LG OIL COOLER TO RETURN FILTER	COMMERCIAL	0
40.00	1	YMD-8529	HOSE ASSEMBLY (S.S.) 1.0" I.D. X 106" LG SWING PUMP TO TANK DRAIN	COMMERCIAL	0
41.00	1	YMD-8529	HOSE ASSEMBLY (S.S.) 1.0" I.D. X 131" LG SYSTEM PUMP TO TANK DRAIN	COMMERCIAL	0
42.00	1	YMD-8529	HOSE ASSEMBLY (S.S.) 1.0" I.D. X 186" LG SWING CONTROL VALVE TO TANK DRAIN	COMMERCIAL	0
43.00	1	YMD-8529	HOSE ASSEMBLY (S.S.) 1.0" I.D. X 52" LG COOLING PUMP TO COOLING CIRCUIT MANIFOLD	COMMERCIAL	0
44.00	1	YMD-8529	HOSE ASSEMBLY (S.S.) 1.0" I.D. X 178" LG SYSTEM CONTROL VALVE TO TANK DRAIN	COMMERCIAL	0
45.00			NOT USED		0
46.00	1	YMD-8528	HOSE ASSEMBLY (S.S.) 0.75 I.D. X 236" LG WINCH DRAIN TO TANK	COMMERCIAL	0
47.00	1	YMD-8525	HOSE ASSEMBLY (S.S.) .375" I.D. X 136" LG SWING CONTROL VALVE TO COOLING CIRCUIT MAINIFOLD PILOT	COMMERCIAL	0
48.00	1	YMD-8525	HOSE ASSEMBLY (S.S.) .375" I.D. X 74" LG SWING COUNTER BALANCE VALVE TO EBR	COMMERCIAL	0

OFFICIAL COPY - 01.17730.0038 - VDB004 - 1 - Approved(A) - - - 06-Jan-2010 06:03 PM

APPLETON MARINE, INC.

Code ID NO. 70433

PARTS LIST FOR:
PIPING ASSEMBLY
AMD-2009
Customer: SBM OFFSHORE GROUP

S.O. NO. 15940
B.M. SERIES 3

Date Run: 10/2/2009
Prep'd By: KEG

ITEM	*QTY*	*PART NO.*	*DESCRIPTION*	*MAT'L / VENDER*	*WT(LBS)*
49.00	1	YMD-8525	HOSE ASSEMBLY (S.S.) .375" I.D. X 103" LG SWING PUMP LOAD SENSE TO CONTROL VALVE	COMMERCIAL	0
50.00	1	YMD-8525	HOSE ASSEMBLY (S.S.) .375" I.D. X 255" LG SYSTEM PUMP LOAD SENSE TO CONTROL VALVE	COMMERCIAL	0
51.00	1	YMD-8525	HOSE ASSEMBLY (S.S.) .375" I.D. X 327" LG AUX WINCH TO EBR	COMMERCIAL	0
52.00	1	YMD-8525	HOSE ASSEMBLY (S.S.) .375" I.D. X 280" LG MAIN WINCH TO EBR	COMMERCIAL	0
53.00	1	YMD-8524	HOSE ASSEMBLY (S.S.) .25 I.D. X 325" LG SWING PRESSURE GAUGE TO CONTROL VALVE	COMMERCIAL	0
54.00	1	YMD-8524	HOSE ASSEMBLY (S.S.) .25 I.D. X 325" LG RETURN PRESSURE GAUGE TO CONTROL VALVE	COMMERCIAL	0
55.00	1	YMD-8524	HOSE ASSEMBLY (S.S.) .25 I.D. X 332" LG COOLING PRESSURE GAUGE	COMMERCIAL	0
56.00	1	YMD-8524	HOSE ASSEMBLY (S.S.) .25 I.D. X 362" LG SYSTEM PRESSURE GAUGE TO CONTROL VALVE	COMMERCIAL	0
57.00	1	YMD-8528	HOSE ASSEMBLY (S.S.) 0.75 I.D. X 75" LG AUX WINCH DRAIN TO MAIN WINCH DRAIN	COMMERCIAL	0
58.00	1	YMD-8525	HOSE ASSEMBLY (S.S.) .375" I.D. X 89" LG AUX WINCH HIGH SPEED	COMMERCIAL	0
59.00			NOT USED		
60.00	1	MMD-4183	PIPE RUN - MANIFOLD CONNECTOR L1 = 21" X H1 = 2.75" X A1 = 11"	WELDMENT	0
61.00	1	MMD-4183	PIPE RUN - MANIFOLD CONNECTOR L1 = 20.81" X H1 = 2.75" X A1 = 11"	WELDMENT	0
62.00	1	MMD-4713	PIPE RUN - LUFF CYLINDER L = 182"	WELDMENT	0
63.00	1	MMD-4713	PIPE RUN - LUFF CYLINDER L = 185"	WELDMENT	0
64.00	1	MMD-4770	PIPE RUN - RETURN VALVE L1= 60" , L2= 8.5", L3= 4"	WELDMENT	0

OFFICIAL COPY - 01.17730.0038 - VDB004 - 1 - Approved(A) - - - 06-Jan-2010 06:03 PM

APPLETON MARINE, INC.

Code ID NO. 70433

PARTS LIST FOR:
PIPING ASSEMBLY
AMD-2009
Customer: SBM OFFSHORE GROUP

S.O. NO. 15940
B.M. SERIES 3

Date Run: 10/2/2009
Prep'd By: KEG

ITEM	*QTY*	*PART NO.*	*DESCRIPTION*	*MAT'L / VENDER*	*WT(LBS)*
65.00	1	MMD-4777	PIPE RUN L1= 9.5", L2= 4.5"	WELDMENT	0
66.00	1	MMD-4778	PIPE RUN L = 12"	WELDMENT	0
67.00			NOT USED		
68.00			NOT USED		
69.00	50 FT		SEAMLESS HYDRAULIC TUBING 1.00" O.D. X .083" WALL	AISI A213 316 STN STL 2.5% > Mo	
70.00	16	0318-16-SS	TUBE NUT	BRENNAN IND.	0
71.00	16	0319-16-SS	TUBE SLEEVE	BRENNAN IND.	0
72.00	20 FT		SEAMLESS HYDRAULIC TUBING 0.75" O.D. X .065" WALL	AISI A213 316 STN STL 2.5% > Mo	
73.00	6	0318-12-SS	TUBE NUT	BRENNAN IND.	0
74.00	6	0319-12-SS	TUBE SLEEVE	BRENNAN IND.	0
75.00	5 FT		SEAMLESS HYDRAULIC TUBING 0.50" O.D. X .049" WALL	AISI A213 316 STN STL 2.5% > Mo	
76.00	2	0318-08-SS	TUBE NUT	BRENNAN IND.	0
77.00	2	0319-08-SS	TUBE SLEEVE	BRENNAN IND.	0
78.00	20 FT		SEAMLESS HYDRAULIC TUBING 0.375" O.D. X .035" WALL	AISI A213 316 STN STL 2.5% > Mo	
79.00	6	0318-06-SS	TUBE NUT	BRENNAN IND.	0
80.00	6	0319-06-SS	TUBE SLEEVE	BRENNAN IND.	0

OFFICIAL COPY - 01.17730.0038 - VDB004 - 1 - Approved(A) - - - 06-Jan-2010 06:03 PM

APPLETON MARINE, INC.

Code ID NO. 70433

PARTS LIST FOR:
PIPING ASSEMBLY
AMD-2009
Customer: SBM OFFSHORE GROUP

S.O. NO. 15940
B.M. SERIES 3

Date Run: 10/2/2009
Prep'd By: KEG

ITEM	*QTY*	*PART NO.*	*DESCRIPTION*	*MAT'L / VENDER*	*WT(LBS)*
81.00	1		BOLT PATTERN ADAPTER BLOCK WITH MOUNTING KIT 2.0" C61 TO 2.0" C61 ANCHOR P/N: AFA-3261-3261U-SS	AISI 316 STN STL	
82.00	1		90° ELBOW BLOCK, 1.5" CODE 62 ANCHOR #W12-24U	COMMERCIAL	
83.00	1	YMD-8529	HOSE ASSEMBLY (S.S.) 1.0" I.D. X 132" LG OIL COOLER TO COOLER MANIFOLD (T)	COMMERCIAL	0
84.00	1	YMD-8529	HOSE ASSEMBLY (S.S.) 1.0" I.D. X 170" LG OIL COOLER TO COOLER MANIFOLD (COOLER)	COMMERCIAL	0
85.00	1		FLANGE ADAPTER 2.0" TO 2.5" C61 MAIN P/N: 1317-40-32 W/MOUNTING KIT P/N: MK561		
86.00	1	6801-06-04-NWO-SS	STRAIGHT THREAD O-RING ELBOW	BRENNAN IND.	0
87.00	6	6801-06-06-NWO-SS	STRAIGHT THREAD O-RING ELBOW	BRENNAN IND.	0
88.00	8	6801-16-16-NWO-SS	STRAIGHT THREAD O-RING ELBOW	BRENNAN IND.	0
89.00	2	6400-06-04-O-SS	STR. THREAD O-RING CONNECTOR	BRENNAN IND.	0
90.00	2	6400-04-06-O-SS	STR. THREAD O-RING CONNECTOR	BRENNAN IND.	0
91.00	7	6400-06-06-O-SS	STR. THREAD O-RING CONNECTOR	BRENNAN IND.	0
92.00	2	6400-12-10-O-SS	STR. THREAD O-RING CONNECTOR	BRENNAN IND.	0
93.00	11	6400-16-16-O-SS	STR. THREAD O-RING CONNECTOR	BRENNAN IND.	0
94.00	1	2406-16-04-SS	TUBE REDUCER	BRENNAN IND.	0
95.00	2	2404-16-16-SS	MALE CONNECTOR	BRENNAN IND.	0
96.00	2	2404-12-12-SS	MALE CONNECTOR	BRENNAN IND.	0

OFFICIAL COPY - 01.17730.0038 - VDB004 - 1 - Approved(A) - - - 06-Jan-2010 06:03 PM

APPLETON MARINE, INC.

Code ID NO. 70433

PARTS LIST FOR:
PIPING ASSEMBLY
AMD-2009
Customer: SBM OFFSHORE GROUP

S.O. NO. 15940
B.M. SERIES 3

Date Run: 10/2/2009
Prep'd By: KEG

ITEM	*QTY*	*PART NO.*	*DESCRIPTION*	*MAT'L / VENDER*	*WT(LBS)*
97.00	6	2404-16-12-SS	MALE CONNECTOR	BRENNAN IND.	0
98.00	1	2603-06-06-06-SS	UNION TEE	BRENNAN IND.	0
99.00	2	2603-12-12-12-SS	UNION TEE	BRENNAN IND.	0
100.00	8	5404-12-12-SS	PIPE NIPPLE	BRENNAN IND.	0
101.00	4	6500-16-16-SS	SWIVEL NUT ELBOW	BRENNAN IND.	0
102.00	2	6804-161616-NWO-SS	O-RING RUN TEE	BRENNAN IND.	0
103.00	1	6410-10-06-O-SS	O-RING ADAPTER	BRENNAN IND.	0
104.00	1	2501-06-12-SS	MALE ELBOW	BRENNAN IND.	0
105.00	1	6602-06-06-06-SS	SWIVEL NUT RUN TEE	BRENNAN IND.	0
106.00	4	2405-04-04-SS	FEMALE CONNECTOR	BRENNAN IND.	0
107.00	4	5503-04-04-SS	45 DEGREE STREET ELBOW	BRENNAN IND.	0
108.00	1	6500-06-06-SS	SWIVEL NUT ELBOW	BRENNAN IND.	0
109.00	1	6502-06-06-SS	45 DEGREE SWIVEL NUT ELBOW	BRENNAN IND.	0

OFFICIAL COPY - 01.17730.0038 - VDB004 - 1 - Approved(A) - - - 06-Jan-2010 06:03 PM

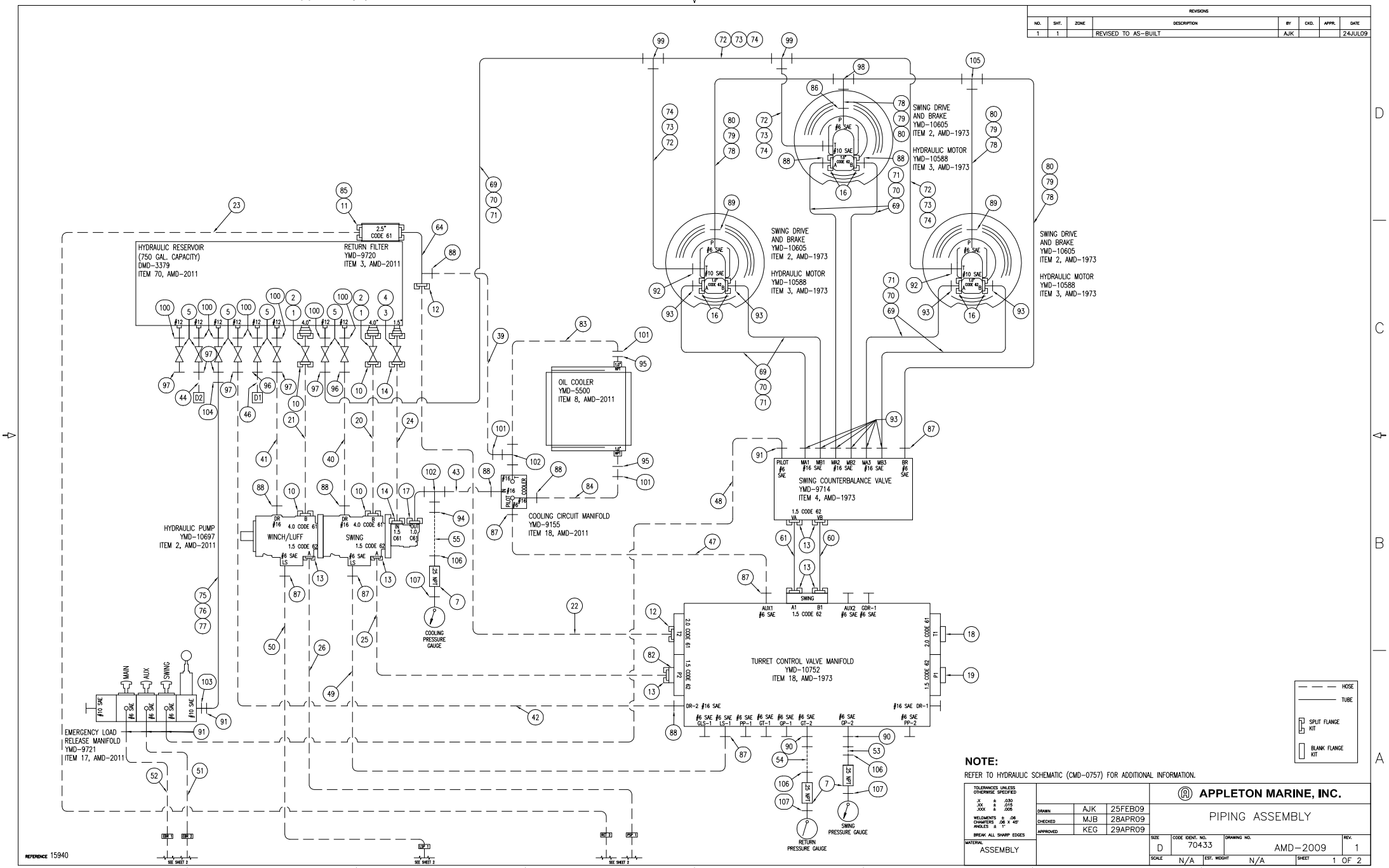

OFFICIAL COPY - 01.17730.0038 - VDB004 - 1 - Approved(A) - - - 06-Jan-2010 06:03 PM

REVISIONS							
NO.	SHT.	ZONE	DESCRIPTION	BY	CKD.	APPR.	DATE
1	2		REVISED TO AS-BUILT	AJK			24JUL09

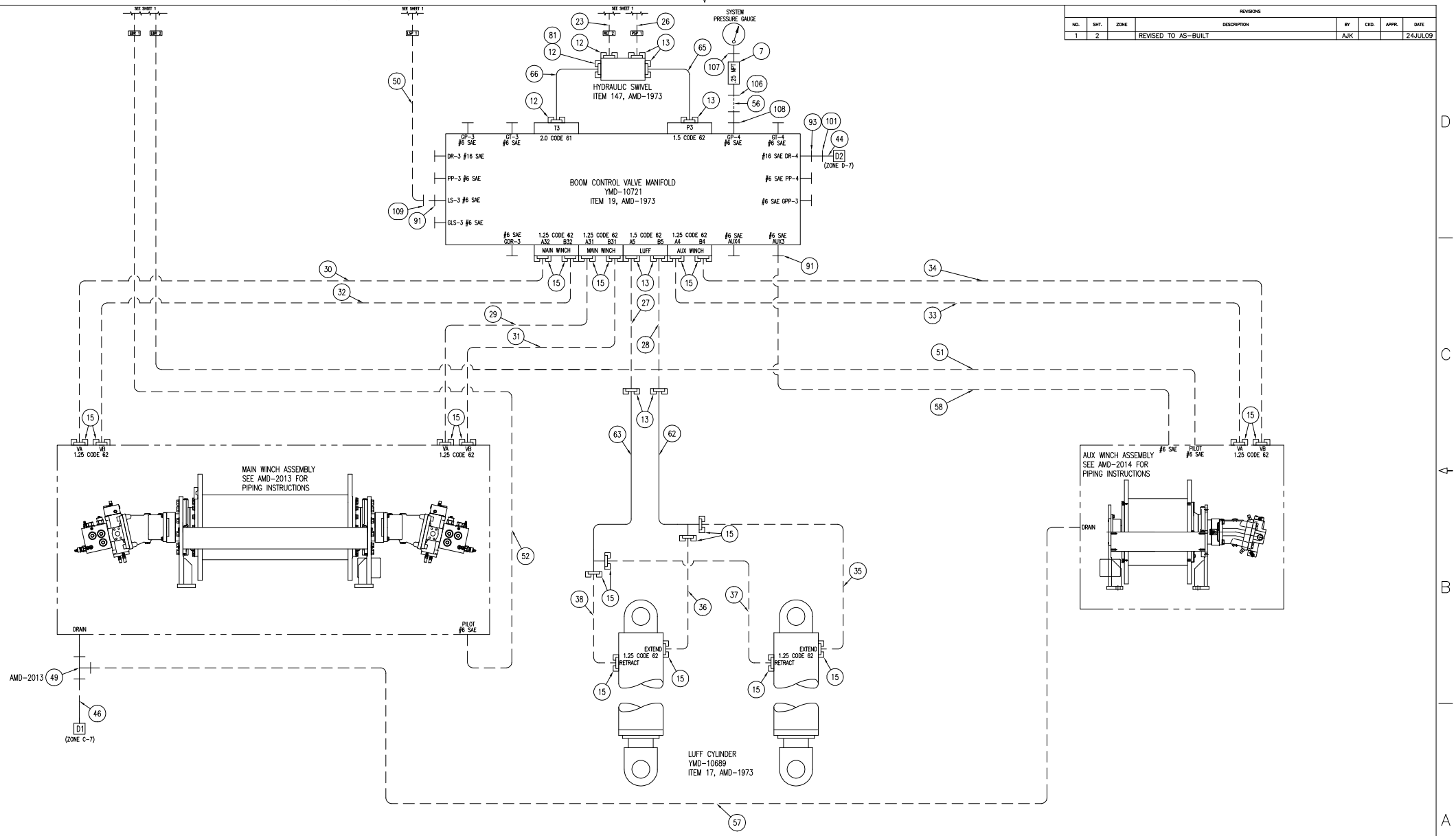

TOLERANCES UNLESS OTHERWISE SPECIFIED			
.X ± .030			
.XX ± .015			
.XXX ± .005			
WELDMENTS ± .06			
CHAMFERS .06 X 45°			
ANGLES ± 1°			
BREAK ALL SHARP EDGES			
MATERIAL			
ASSEMBLY			
DRAWN	AJK	25FEB09	
CHECKED	MJB	28APR09	
APPROVED	KEG	29APR09	

APPLETON MARINE, INC.

PIPING ASSEMBLY

SIZE	CODE IDENT. NO.	DRAWING NO.	REV.
D	70433	AMD-2009	1
SCALE N/A	EST. WEIGHT N/A	SHEET 2 OF 2	

REFERENCE 15940

OFFICIAL COPY - 01.17730.0038 - VDB004 - 1 - Approved(A) - - - 06-Jan-2010 06:03 PM

APPLETON MARINE, INC.

Code ID NO. 70433

PARTS LIST FOR:
POWER UNIT ASSEMBLY
AMD-2011
Customer: SBM OFFSHORE GROUP

S.O. NO. 15940
B.M. SERIES 5

Date Run: 10/2/2009
Prep'd By: KEG

ITEM	*QTY*	*PART NO.*	*DESCRIPTION*	*MAT'L / VENDER*	*WT(LBS)*
1.00	1	YMD-10665	DIESEL ENGINE	COMMERCIAL	2000
2.00	1	YMD-10697	HYDRAULIC PUMP	COMMERCIAL	0
3.00	1	YMD-9720	RETURN FILTER	COMMERCIAL	15
4.00	4		SEALING WASHER, .5" SCREW SIZE MCMASTER CARR #94708A517	COMMERCIAL	
5.00	3	YMD-8485	TANK COVER ASSEMBLY	COMMERCIAL	5
6.00	1	MMD-3066	THROTTLE CABLE BRACKET	HRS-LC	1
7.00	1	YMD-9901	CONTROL CABLE ASSEMBLY	COMMERCIAL	0
8.00	1	YMD-5500	HYDRAULIC OIL COOLER	COMMERCIAL	25
9.00	1	YMD-10113	RESERVOIR BREATHER	COMMERCIAL	2
10.00	1	YMD-10136	BREATHER ADAPTER	COMMERCIAL	0
11.00	2	YMD-6249	MAGNETIC PLUG	COMMERCIAL	0
12.00	1	YMD-10103	BALL VALVE - .75 NPT (SS) FUEL TANK	COMMERCIAL	1
13.00	2		REDUCER COUPLING 3/8" NPT X 1/4" NPT	BRASS	
14.00	1		PIPE NIPPLE 3/8" NPT X 40.0" LG	BRASS	
15.00	2	5404-12-12-SS	PIPE NIPPLE	BRENNAN IND.	0
16.00	6		SQUARE HEAD PIPE PLUG 3/4" NPT	BRASS	

OFFICIAL COPY - 01.17730.0038 - VDB004 - 1 - Approved(A) - - - 06-Jan-2010 06:03 PM

APPLETON MARINE, INC.

Code ID NO. 70433

PARTS LIST FOR:
POWER UNIT ASSEMBLY
AMD-2011
Customer: SBM OFFSHORE GROUP

S.O. NO. 15940
B.M. SERIES 5

Date Run: 10/2/2009
Prep'd By: KEG

ITEM	*QTY*	*PART NO.*	*DESCRIPTION*	*MAT'L / VENDER*	*WT(LBS)*
17.00	1	YMD-9721	EMERGENCY RELEASE MANIFOLD	COMMERCIAL	5
18.00	1	YMD-9155	COOLING CIRCUIT MANIFOLD	COMMERCIAL	10
19.00	1	YMD-9675	LIMIT SWITCH	COMMERCIAL	0
20.00	1	YMD-6399	BREATHER	COMMERCIAL	0
21.00	1	YMD-8614	TEMPERATURE TRANSMITTER	COMMERCIAL	5
22.00	1	YMD-3069	LIQUID LEVEL SWITCH	COMMERCIAL	1
23.00	1	YMD-7847	LIQUID LEVEL GAUGE	COMMERCIAL	0
24.00	1	YMD-8790	LIQUID LEVEL GAUGE	COMMERCIAL	7
25.00	1	MMD-4194	EMERGENCY RELEASE BRACKET	HRS-LC	6
26.00	1	MMD-4306	SPACER	NYLON	0
27.00	1	DMD-3365	DIESEL FUEL TANK	WELDMENT	420
28.00	2		BATTERY BOX MCMASTER CARR #69995K86	COMMERCIAL	
29.00	1		CHECK VALVE MCMASTER CARR #7746K822	COMMERCIAL	
30.00	1		HOSE ASSEMBLY - 0.75 ID X 25 FT LG MCMASTER CARR #5282K79 FUEL FILL HOSE	COMMERCIAL	
31.00	1		HOSE CLAMP MCMASTER CARR #5011T181	COMMERCIAL	
32.00	1		BRONZE BEARING, .5 OD X .38 ID X 1.25 LG MCMASTER CARR #6381K456	COMMERCIAL	

OFFICIAL COPY - 01.17730.0038 - VDB004 - 1 - Approved(A) - - - 06-Jan-2010 06:03 PM

APPLETON MARINE, INC.

Code ID NO. 70433

PARTS LIST FOR:
POWER UNIT ASSEMBLY
AMD-2011
Customer: SBM OFFSHORE GROUP

S.O. NO. 15940
B.M. SERIES 5

Date Run: 10/2/2009
Prep'd By: KEG

ITEM	*QTY*	*PART NO.*	*DESCRIPTION*	*MAT'L / VENDER*	*WT(LBS)*
33.00	1		KNOB, .375-16NC TAPPED THRU MCMASTER CARR #60205K27	COMMERCIAL	
34.00	1		FORGED STEEL CLEVIS, ZNC PLTD MCMASTER CARR #1583K15	COMMERCIAL	
35.00	4		ALL DIRECTION NEOPRENE MOUNT MCMASTER CARR #6309K31	COMMERCIAL	
36.00	4		LOAD RATED BUMPER MCMASTER CARR #9377K52	COMMERCIAL	
37.00	2	JMD-1195	BRACKET - HYD OIL COOLER	WELDMENT	18
38.00	1	YMD-10018	EXPANDED METAL - COOLER	304 STN STL	2
39.00	1	JMD-1733	GUARD - RETURN FILTER	HRS-LC	5
40.00	1	JMD-1741	GUARD - LEVEL SWITCH	HRS-LC	4
41.00	2		BATTERY, 900 CCA OPTIMA POWER SOURCE P/N: OPT 8051-160	COMMERCIAL	50
42.00	1	JMD-1674	MUFFLER GUARD	WELDMENT	80
43.00	1	MMD-3796	CONNECTING ROD	AISI 304 STN STL	2
44.00	1	MMD-3792	MOUNTING PLATE FIRE AND HEAT DETECTOR	AISI 316 STN STL	7
45.00	1	MMD-3793	MOUNTING PLATE GAS DETECTOR	AISI 316 STN STL	7
46.00	1	MMD-4360	PLATE LIMIT SWITCH	AISI 316 STN STL	1
47.00	1	YMD-9729	HOSE ASSEMBLY - .41 I.D. X 90"LG (MARINE FUEL HOSE)	COMMERCIAL	0
48.00	1	YMD-10066	HOSE ASSEMBLY - .31 I.D. X 63" LG (MARINE FUEL LINE)	COMMERCIAL	0

OFFICIAL COPY - 01.17730.0038 - VDB004 - 1 - Approved(A) - - - 06-Jan-2010 06:03 PM

APPLETON MARINE, INC.

Code ID NO. 70433

PARTS LIST FOR:
POWER UNIT ASSEMBLY
AMD-2011
Customer: SBM OFFSHORE GROUP

S.O. NO. 15940
B.M. SERIES 5

Date Run: 10/2/2009
Prep'd By: KEG

ITEM	*QTY*	*PART NO.*	*DESCRIPTION*	*MAT'L / VENDER*	*WT(LBS)*
49.00	1	2501-06-08-SS	MALE ELBOW	BRENNAN IND.	0
50.00	1	2501-06-06-SS	MALE ELBOW	BRENNAN IND.	0
51.00	1 FT		SEAMLESS HYDRAULIC TUBING .375 O.D. X 0.35 WALL	AISI A213 316 STN STL	
52.00	2	0318-06-SS	TUBE NUT	BRENNAN IND.	0
53.00	2	0319-06-SS	TUBE SLEEVE	BRENNAN IND.	0
54.00	1		FUEL CHECK VALVE 3/8" NPT MALE TO 3/8" NPT FEMALE PARKER PN: 2650	COMMERCIAL	
55.00	1	5405-06-08	PIPE REDUCER	BRENNAN IND.	0
56.00	1	2405-06-06-SS	FEMALE CONNECTOR	BRENNAN IND.	0
57.00	1	2405-06-08-SS	FEMALE CONNECTOR	BRENNAN IND.	0
58.00	1	5404-12-12-SS	PIPE NIPPLE	BRENNAN IND.	0
59.00	1		REDUCER 1.0 NPT MALE TO .75 NPT FEMALE	BRASS	
60.00	1		STREET ELBOW .75" NPT	BRASS	
61.00	1	NMD-1064	DECAL - ENGINE AIR INTAKE SHUT-OFF	SEE NOTES	0
62.00	2	YMD-9797	GAS DETECTOR	COMMERCIAL	7
63.00	1	YMD-9798	FLAME DETECTOR	COMMERCIAL	3
64.00	1	YMD-9799	SMOKE DETECTOR	COMMERCIAL	2

OFFICIAL COPY - 01.17730.0038 - VDB004 - 1 - Approved(A) - - - 06-Jan-2010 06:03 PM

APPLETON MARINE, INC.

Code ID NO. 70433

PARTS LIST FOR:
POWER UNIT ASSEMBLY
AMD-2011
Customer: SBM OFFSHORE GROUP

S.O. NO. 15940
B.M. SERIES 5

Date Run: 10/2/2009
Prep'd By: KEG

ITEM	*QTY*	*PART NO.*	*DESCRIPTION*	*MAT'L / VENDER*	*WT(LBS)*
65.00	1	YMD-10716	PRESSURE SWITCH	COMMERCIAL	1
66.00	1	YMD-10717	TEMPERATURE SWITCH	COMMERCIAL	1
67.00	1	YMD-8163	FILLER - STRAINER (FUEL TANK)	COMMERCIAL	1
68.00	1	YMD-10708	DISCONNECT ENCLOSURE	COMMERCIAL	100
69.00	1	YMD-10723	PLC ENCLOSURE	COMMERCIAL	100
70.00	1	DMD-3379	HYDRAULIC TANK	WELDMENT	2125
71.00	1	JMD-1920	BATTERY BOX TRAY	WELDMENT	26
72.00	1	MMD-4793	BATTERY BOX TRAY COVER BAR	AISI 316 STN STL	3
73.00	2		THREADED ROD, .25-20NC X 12.0 LG	AISI 316 STN STL	
74.00	2		NYLOCK NUT, .25-20NC	AISI 316 STN STL	
75.00	16		HHCS, .750-10NC X 2.5LG	GRADE 5 STL ZNC PLTD	
76.00	4		HHCS, .750-10NC X 2.0 LG	GRADE 5 STL ZNC PLTD	
77.00	20		SAE HARDENED FLATWASHER, .75 DIA	STEEL ZNC PLTD	
78.00	16		BEVEL WASHER, .750 DIA	STEEL ZNC PLTD	
79.00	16		HEX NUT, .750-10NC	GRADE 5 STL ZNC PLTD	
80.00	4		HHCS, .500-13NC X 2.0 LG	GRADE 5 STL ZNC PLTD	

OFFICIAL COPY - 01.17730.0038 - VDB004 - 1 - Approved(A) - - - 06-Jan-2010 06:03 PM

APPLETON MARINE, INC.

Code ID NO. 70433

PARTS LIST FOR:
POWER UNIT ASSEMBLY
AMD-2011
Customer: SBM OFFSHORE GROUP

S.O. NO. 15940
B.M. SERIES 5

Date Run: 10/2/2009
Prep'd By: KEG

ITEM	*QTY*	*PART NO.*	*DESCRIPTION*	*MAT'L / VENDER*	*WT(LBS)*
81.00	4		HARDENED FLATWASHER, .500 DIA	STEEL ZNC PLTD	
82.00	8		HHCS, .375-16NC X 2.0 LG	GRADE 5 STL ZNC PLTD	
83.00	8		SAE HARDENED FLATWASHER, .375 DIA	STEEL ZNC PLTD	
84.00	8		HEX NUT, .375-16NC	GRADE 5 STL ZNC PLTD	
85.00	4		HHCS, .625-11NC X 2.75 LG	AISI 316 STN STL	
86.00	3		HHCS, .625-11NC X 2.5 LG	AISI 316 STN STL	
87.00	4		FLATWASHER, .625 DIA	AISI 316 STN STL	
88.00	10		LOCKWASHER, .375 DIA	AISI 316 STN STL	
89.00	10		HEX NUT, .375-16NC	AISI 316 STN STL	
90.00	4		HHCS, .500-13NC X 1.75 LG	AISI 316 STN STL	
91.00	2		HHCS, .50-13NC X 1.5 LG	AISI 316 STN STL	
92.00	2		LOCKWASHER, .50 DIA	AISI 316 STN STL	
93.00	2		HEX NUT, .50-13NC	AISI 316 STN STL	
94.00	4		HHCS, .375-16NC X 4.5 LG	AISI 316 STN STL	
95.00	2		HHCS, .375-16NC X 4.0 LG	AISI 316 STN STL	
96.00	6		HHCS, .375-16NC X 3.5 LG	AISI 316 STN STL	

OFFICIAL COPY - 01.17730.0038 - VDB004 - 1 - Approved(A) - - - 06-Jan-2010 06:03 PM

APPLETON MARINE, INC.

Code ID NO. 70433

PARTS LIST FOR:
POWER UNIT ASSEMBLY
AMD-2011
Customer: SBM OFFSHORE GROUP

S.O. NO. 15940
B.M. SERIES 5

Date Run: 10/2/2009
Prep'd By: KEG

ITEM	*QTY*	*PART NO.*	*DESCRIPTION*	*MAT'L / VENDER*	*WT(LBS)*
97.00	2		HHCS, .375-16NC X 2.5 LG	AISI 316 STN STL	
98.00	4		HHCS, .375-16NC X 1.5 LG	AISI 316 STN STL	
99.00	18		HHCS, .375-16NC X 1.25	AISI 316 STN STL	
100.00	4		WELD STUD, .375-16NC X 1.0 LG	AISI 316 STN STL	
101.00	40		LOCKWASHER, .375 DIA	AISI 316 STN STL	
102.00	12		FLATWASHER, .375 DIA	AISI 316 STN STL	
103.00	40		HEX NUT, .375-16NC	AISI 316 STN STL	
104.00	4		BEVEL WASHERS, .375 DIA	AISI 316 STN STL	
105.00	16		HHCS, .25-20NC X 1.0 LG	AISI 316 STN STL	
106.00	4		HHCS, .25-20NC X .75 LG	AISI 316 STN STL	
107.00	20		LOCKWASHER, .25 DIA	AISI 316 STN STL	
108.00	4		FLATWASHER, .25 DIA	AISI 316 STN STL	
109.00	18		HEX NUT, .25-20NC	AISI 316 STN STL	
110.00	2		RHMS, #10-24NC X .75 LG	AISI 316 STN STL	
111.00	6		RHMS, #10-24NC X .5 LG	AISI 316 STN STL	
112.00	10		LOCKWASHER, #10 DIA	AISI 316 STN STL	

OFFICIAL COPY - 01.17730.0038 - VDB004 - 1 - Approved(A) - - - 06-Jan-2010 06:03 PM

APPLETON MARINE, INC.

Code ID NO. 70433

PARTS LIST FOR:
POWER UNIT ASSEMBLY
AMD-2011
Customer: SBM OFFSHORE GROUP

S.O. NO. 15940
B.M. SERIES 5

Date Run: 10/2/2009
Prep'd By: KEG

ITEM	*QTY*	*PART NO.*	*DESCRIPTION*	*MAT'L / VENDER*	*WT(LBS)*
113.00	2		FLATWASHER, #10 DIA	AISI 316 STN STL	
114.00	2		HEX NUT, #10-24NC	AISI 316 STN STL	
115.00	6		RHMS #8-32 NC X .5 LG	AISI 316 STN STL	
116.00	6		LOCKWASHER, #8 DIA	AISI 316 STN STL	
117.00	1		.25 X 1.0 X 14 LG BATTERY BOX ANCHOR BAR	ASTM A36	
118.00	2		RHMS, #10-24NC X 1.0 LG	AISI 316 STN STL	
119.00	1	NMD-1059	DECALS - HPU	VINYL	0
120.00	1	JMD-1524	DECAL - EMERGENCY RELEASE	SEE NOTES	0
121.00	1	NMD-1051	DECALS - HYDRAULIC	VINYL	0
122.00	4		LOCKWASHER .63 DIA	AISI 316 STN STL	
123.00	4		HEX NUT .63-11NC	AISI 316 STN STL	
124.00	5		RHMS #10-24NC X .75 LG	AISI 316 STN STL	
125.00	5		SEALING WASHER #10 DIA	AISI 316 STN STL	
126.00	1		O-RING FOR FUEL RETURN O-RING FACE SEAL PARKER #J0RG-6	COMMERCIAL	

OFFICIAL COPY - 01.17730.0038 - VDB004 - 1 - Approved(A) - - - 06-Jan-2010 06:03 PM

NOTE:

1. AN OIL SAMPLE OF THE SUMP IS REQUIRED AFTER TESTING IS COMPLETE. A CLEANLINESS REPORT OF THE SAMPLE IS REQUIRED.
2. THE TEMPERATURE AND PRESSURE SWITCH (ITEMS "65" & "66") WILL BE MOUNTED ON THE DIESEL PRIOR TO ASSEMBLY.

REVISIONS							
NO.	SHT.	ZONE	DESCRIPTION	BY	CKD.	APPR.	DATE
1	1		REVISED TO AS-BUILT	MJB			24AUG09

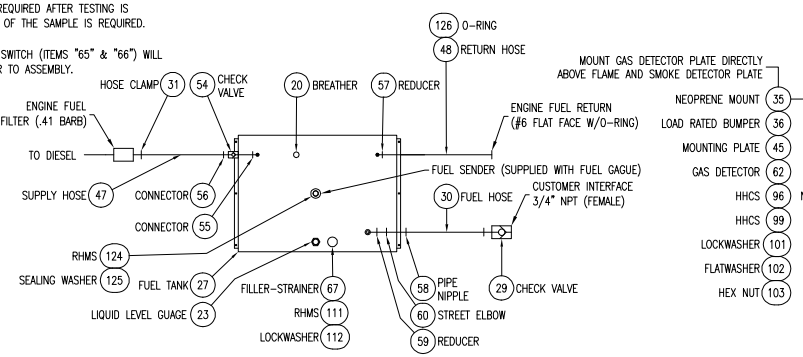

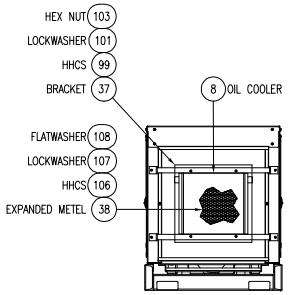

VIEW A-A

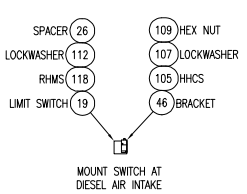

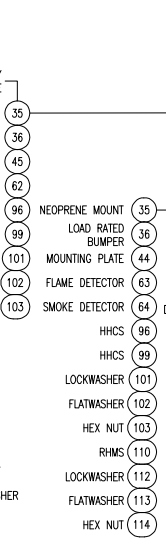

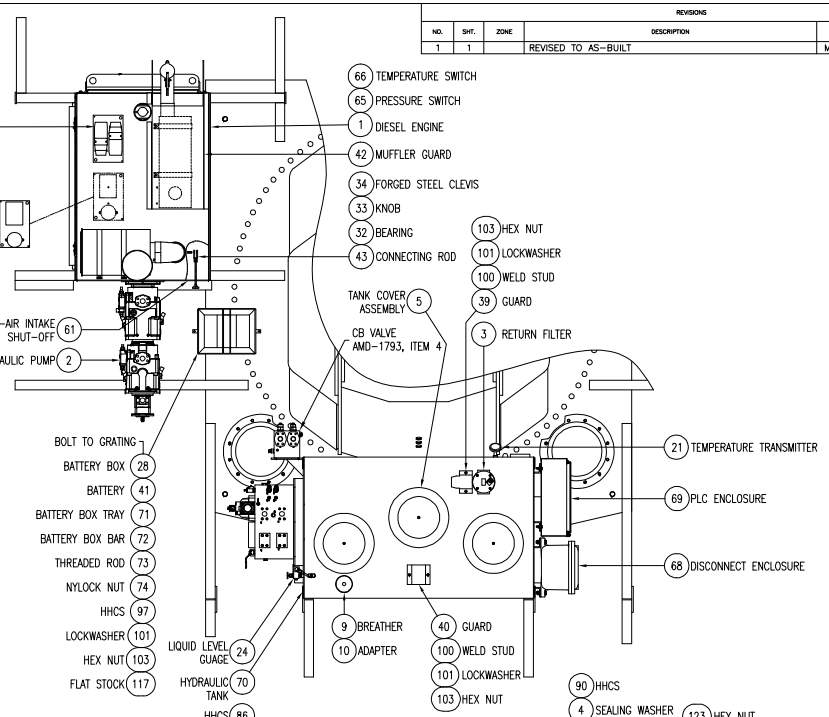

MOUNT AT ASSEMBLY

119 DECAL – HPU
120 DECAL – EMERGENCY RELEASE
121 DECAL – HYDRAULIC

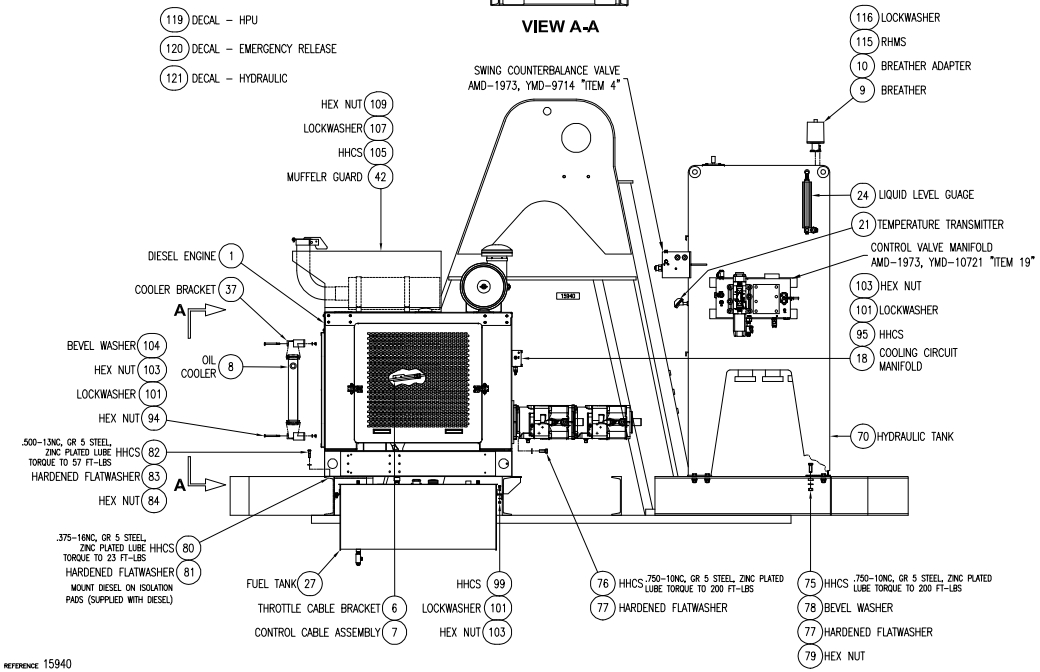

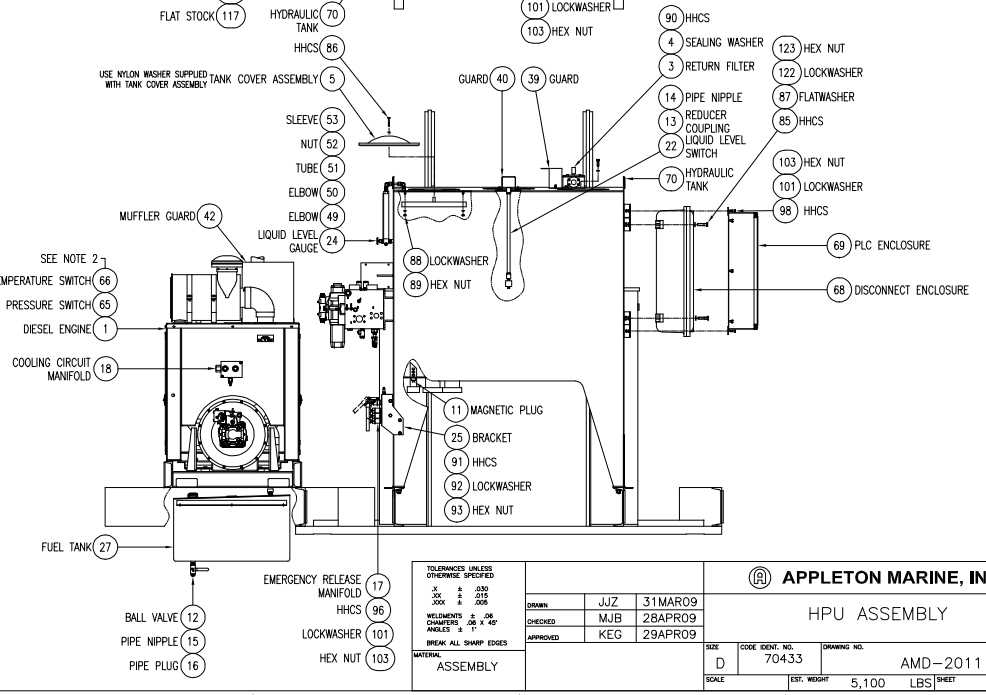

REFERENCE 15940

TOLERANCES UNLESS OTHERWISE SPECIFIED			
.X ± .030			
.XX ± .015			
.XXX ± .005			
WELDMENTS ± .06			
CHAMFERS .06 X 45°			
ANGLES ± 1°			
BREAK ALL SHARP EDGES			
MATERIAL	ASSEMBLY		
DRAWN	JJZ	31MAR09	
CHECKED	MJB	28APR09	
APPROVED	KEG	29APR09	

APPLETON MARINE, INC.

HPU ASSEMBLY

SIZE	CODE IDENT. NO.	DRAWING NO.	REV.
D	70433	AMD-2011	1

SCALE | EST. WEIGHT 5,100 LBS | SHEET 1 OF 1

OFFICIAL COPY - 01.17730.0038 - VDB004 - 1 - Approved(A) - - - 06-Jan-2010 06:03 PM

APPLETON MARINE, INC.

Code ID NO. 70433

PARTS LIST FOR:
CAB ASSEMBLY
AMD-2012
Customer: SBM OFFSHORE GROUP

S.O. NO. 15940
B.M. SERIES 6

Date Run: 10/2/2009
Prep'd By: KEG

ITEM	*QTY*	*PART NO.*	*DESCRIPTION*	*MAT'L / VENDER*	*WT(LBS)*
1.00	1	DMD-3436	CAB FRAME	WELDMENT	1200
2.00	1	NMD-0854	DOOR - RH	COMMERCIAL	0
3.00	1	NMD-0879	WINDOW - RH	COMMERCIAL	0
4.00	1	NMD-0880	WINDOW - LH	COMMERCIAL	0
5.00	1	NMD-0881	FIXED WINDOW - TOP	COMMERCIAL	0
6.00	1	NMD-0882	FIXED WINDOW - BOTTOM	COMMERCIAL	0
7.00	1	YMD-7928	OPERATOR'S CHAIR	COMMERCIAL	0
8.00	1	JMD-1830	CHAIR SUPPORT	WELDMENT	34
9.00	1	YMD-8391	CAB FAN	COMMERCIAL	0
10.00	1	YMD-10911	WINDHSHEILD WIPER ASSEMBLY	COMMERICAL	0
11.00	1	YMD-9899	HVAC UNIT	COMMERCIAL	105
12.00	1	YMD-8602	DEAD MAN FOOTSWITCH	COMMERCIAL	5
13.00	1	YMD-6547	ACCELERATOR CONTROL	COMMERCIAL	5
14.00	2	MMD-3789	LIGHT WIND DEFLECTOR	POLISHED S.S.	13
15.00	6		HHCS M8 X 1.25 X 25MM LG	AISI 316 STN STL	
16.00	1	YMD-9907	SOUNDER	COMMERCIAL	6

OFFICIAL COPY - 01.17730.0038 - VDB004 - 1 - Approved(A) - - - 06-Jan-2010 06:03 PM

APPLETON MARINE, INC.

Code ID NO. 70433

PARTS LIST FOR:
CAB ASSEMBLY
AMD-2012
Customer: SBM OFFSHORE GROUP

S.O. NO. 15940
B.M. SERIES 6

Date Run: 10/2/2009
Prep'd By: KEG

ITEM	*QTY*	*PART NO.*	*DESCRIPTION*	*MAT'L / VENDER*	*WT(LBS)*
17.00	1	JMD-1714	LIGHT MOUNTING BRACKET	WELDMENT	8
18.00	1	MMD-4307	LIMIT SWITCH BRACKET	WELDMENT	1
19.00			NOT USED		
20.00			NOT USED		
21.00	10		HHCS .50-13NC X 1.25 LG	AISI 316 STN STL	
22.00			NOT USED		
23.00	10		LOCKWASHER .50 DIA	AISI 316 STN STL	
24.00	7		HEX NUT .50-13NC	AISI 316 STN STL	
25.00	27		HHCS .31-18NC X .75 LG	AISI 316 STN STL	
26.00	27		LOCKWASHER .31 DIA	AISI 316 STN STL	
27.00	24		HHCS .25-20NC X 1.0 LG	AISI 316 STN STL	
28.00	24		LOCKWASHER .25 DIA	AISI 316 STN STL	
29.00	5		RHMS #10-24NC X .5 LG	AISI 316 STN STL	
30.00	5		LOCKWASHER #10 DIA	AISI 316 STN STL	
31.00	24		RHMS #8-32NC X .5 LG	AISI 316 STN STL	
32.00	24		LOCKWASHER #8 DIA	AISI 316 STN STL	

OFFICIAL COPY - 01.17730.0038 - VDB004 - 1 - Approved(A) - - - 06-Jan-2010 06:03 PM

APPLETON MARINE, INC.

Code ID NO. 70433

PARTS LIST FOR:
CAB ASSEMBLY
AMD-2012
Customer: SBM OFFSHORE GROUP

S.O. NO. 15940
B.M. SERIES 6

Date Run: 10/2/2009
Prep'd By: KEG

ITEM	*QTY*	*PART NO.*	*DESCRIPTION*	*MAT'L / VENDER*	*WT(LBS)*
33.00			3/8" CONVOLUTED TUBING TYTON #CTN38	COMMERCIAL	
34.00	5 FT		CORRUGATED TOP VINYL SPONGE MAT MCMASTER-CARR P/N: 7018T71	COMMERCIAL	
35.00			3M AEROSOL ADHESIVE #74 FOAM MCMASTER-CARR P/N: 7610A15	COMMERCIAL	
36.00	16 FT		POLYURETHANE FOAM SHEETING MCMASTER-CARR P/N: 9385K23	COMMERCIAL	
37.00	1	MMD-4870	WIPER GUARD	AISI 316 STN STL	5
38.00	4		FLATWASHER .31 DIA	AISI 316 STN STL	
39.00	2	MMD-3791	SPACER, LIGHT MOUNTING BRACKET	ASTM A36	12
40.00	2	MMD-3790	LIGHT MOUNTING BRACKET	ASTM A36	24
41.00	9		SEALING WASHER FOR 1/2" SCREW MCMASTER CARR P/N: 94708A517	COMMERCIAL	
42.00	20 FT		RUBBER GASKET MATERIAL .125 THK X 1.75 WIDE	COMMERCIAL	
43.00	2	YMD-10168	EMERGENCY LIGHTING FIXTURE	COMMERCIAL	22
44.00	1		DEAD MAN FOOTSWITCH MCMASTER CARR P/N: 7628K77	COMMERCIAL	
45.00	1	MMD-4455	CAB PENETRATION - LEFT CONSOLE	ASTM A36	10
46.00	1	MMD-4456	CAB PENETRATION - RIGHT CONSOLE	ASTM A36	10
47.00			NOT USED		
48.00	1	YMD-10330	LIGHT FIXTURE - HAZARDOUS LOCATION	COMMERCIAL	0

OFFICIAL COPY - 01.17730.0038 - VDB004 - 1 - Approved(A) - - - 06-Jan-2010 06:03 PM

APPLETON MARINE, INC.

Code ID NO. 70433

PARTS LIST FOR:
CAB ASSEMBLY
AMD-2012
Customer: SBM OFFSHORE GROUP

S.O. NO. 15940
B.M. SERIES 6

Date Run: 10/2/2009
Prep'd By: KEG

ITEM	*QTY*	*PART NO.*	*DESCRIPTION*	*MAT'L / VENDER*	*WT(LBS)*
49.00	1	MMD-4457	LIGHT BRACKET	ASTM A36	2
50.00	1		BLACK LIGHT BULB - 15 WATTS BULBMAN P/N: CF15/3U/BLB	COMMERCIAL	
51.00	4		LOCKWASHER .38 DIA	AISI 316 STN STL	
52.00	4		HEX NUT .38-16NC	AISI 316 STN STL	
53.00	4		HHCS .38-16NC X 1.25 LG	AISI 316 STN STL	
54.00	4		HHCS .31-18NC X 1.5 LG	AISI 316 STN STL	
55.00	2		HHCS .25-20NC X .5 LG	AISI 316 STN STL	
56.00	2		HHCS .25-20NC X 1.5 LG	AISI 316 STN STL	
57.00	2		FLATWASHER .25 DIA	AISI 316 STN STL	
58.00	5		HEX NUT .25-20NC	AISI 316 STN STL	
59.00	1	MMD-4734	CAB PENETRATION - REAR	ASTM A36	15
60.00	1	MMD-4735	GASKET	NEOPRENE	0
61.00	1		FIRE EXTINGUISHER - 15LB CARBON DIOXIDE MCMASTER CARR P/N: 6426T24	COMMERCIAL	
62.00	1	AMD-2014	CONTROL CONSOLE ASSEMBLY	BM SERIES 08	0
63.00	1	YMD-9799	SMOKE DETECTOR	COMMERCIAL	2
64.00	1	YMD-10229	PUSHBUTTON CALLPOINT	COMMERCIAL	12

OFFICIAL COPY - 01.17730.0038 - VDB004 - 1 - Approved(A) - - - 06-Jan-2010 06:03 PM

APPLETON MARINE, INC.

Code ID NO. 70433

PARTS LIST FOR:
CAB ASSEMBLY
AMD-2012
Customer: SBM OFFSHORE GROUP

S.O. NO. 15940
B.M. SERIES 6

Date Run: 10/2/2009
Prep'd By: KEG

ITEM	*QTY*	*PART NO.*	*DESCRIPTION*	*MAT'L / VENDER*	*WT(LBS)*
65.00	1	YMD-10751	RELAY ENCLOSURE	COMMERCIAL	100
66.00	1	YMD-10734	DISPLAY UNIT ENCLOSURE	COMMERCIAL	20
67.00	1	MMD-4657	SAFTEY BAR - WIDE CAB	WELDMENT	9
68.00	1	MMD-4813	DISPLAY UNIT BRACKET	WELDMENT	9
69.00	2		U-BOLT FOR 1.0" PIPE MCMASTER P/N: 8896T125	COMMERCIAL	
70.00	4		HEX NUT .31-18NC	AISI 316 STN STL	
71.00	1	NMD-1445	DECAL - LOAD CHART	VINYL	0
72.00	1	NMD-1446	DECAL - LUBRICATION CHART	VINYL	0
73.00	1	NMD-1447	DECAL - LUBRICATION DIAGRAM	VINYL	0
74.00	1	NMD-1448	DECAL - INFORMATION CHART	VINYL	0
75.00	1	JMD-1519	DECAL - WARNING / CAUTION	SEE NOTES	0

OFFICIAL COPY - 01.17730.0038 - VDB004 - 1 - Approved(A) - - - 06-Jan-2010 06:03 PM

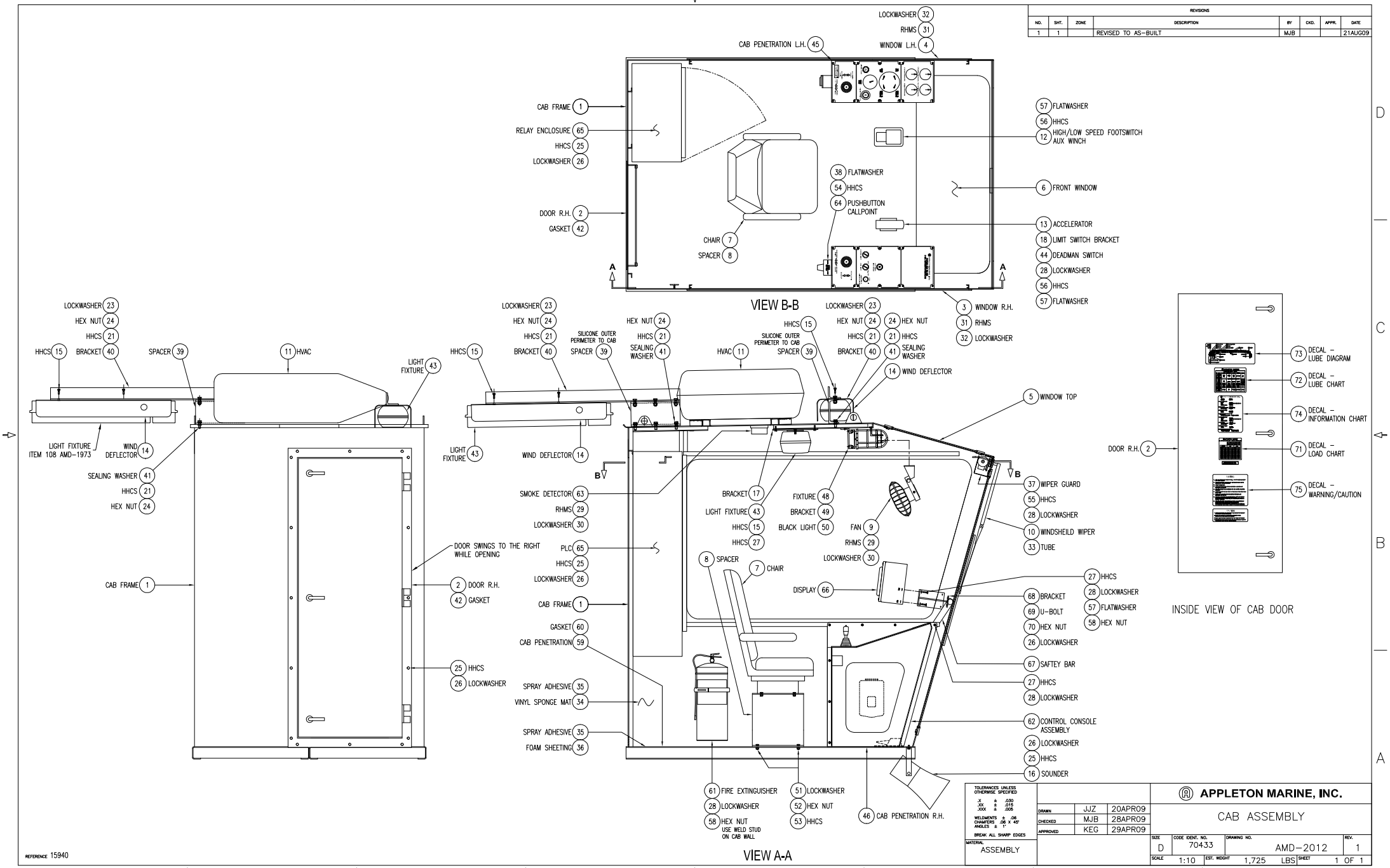

OFFICIAL COPY - 01.17730.0038 - VDB004 - 1 - Approved(A) - - - 06-Jan-2010 06:03 PM

APPLETON MARINE, INC.

Code ID NO. 70433

PARTS LIST FOR:
MAIN WINCH ASSEMBLY
AMD-2013
Customer: SBM OFFSHORE GROUP

S.O. NO. 15940
B.M. SERIES 7

Date Run: 10/2/2009
Prep'd By: KEG

ITEM	*QTY*	*PART NO.*	*DESCRIPTION*	*MAT'L / VENDER*	*WT(LBS)*
1.00	2	YMD-10703	GEAR BOX WITH SPRAG CLUTCH/BRAKE	COMMERCIAL	270
2.00	2	YMD-9946	HYDRAULIC MOTOR	COMMERCIAL	99
3.00	1	DMD-3343	DRUM	WELDMENT	1003
4.00	1	DMD-3344	END STAND	WELDMENT	225
5.00	1	DMD-3345	END STAND	WELDMENT	216
6.00	2	MMD-4695	SPACER	ASTM A36	65
7.00	1	YMD-9962	ROTARY LIMIT SWITCH	COMMERCIAL	4
8.00	1	GMD-0276	GEAR	NYLON	0
9.00	1	GMD-0298	PINION	NYLON	1
10.00	2	YMD-10577	COUNTERBALANCE VALVE MANIFOLD	COMMERCIAL	15
11.00	1	MMD-2217	ROPE CLAMP	ASTM A36	1
12.00	24		HHCS, M20 X 60 MM	ISO CLASS 10.9 ZNC PLTD	
13.00	32		HARDENED FLATWASHER, M20 DIA	STEEL ZNC PLTD	
14.00	32		HHCS, M16 X 60 MM	ISO CLASS 10.9 ZNC PLTD	
15.00	32		HARDENED FLATWASHER, M16 DIA	STEEL ZNC PLTD	
16.00	8		HHCS, M20 X 50 MM	ISO CLASS 8.8 ZNC PLTD	

OFFICIAL COPY - 01.17730.0038 - VDB004 - 1 - Approved(A) - - - 06-Jan-2010 06:03 PM

APPLETON MARINE, INC.

Code ID NO. 70433

PARTS LIST FOR:
MAIN WINCH ASSEMBLY
AMD-2013
Customer: SBM OFFSHORE GROUP

S.O. NO. 15940
B.M. SERIES 7

Date Run: 10/2/2009
Prep'd By: KEG

ITEM	*QTY*	*PART NO.*	*DESCRIPTION*	*MAT'L / VENDER*	*WT(LBS)*
17.00			NOT USED		
18.00	16		SHCS .500-13NC X 6.0 LG	STL PLAIN FINISH	
19.00	2		SHCS, .500-13NC X 2.0 LG	AISI 316 STN STL	
20.00	10		HIGH COLLAR LOCKWASHER, .500 DIA	AISI 316 STN STL	
21.00	8		HHCS, .375-16NC X 2.5 LG	GRADE 5 STL ZNC PLTD	
22.00	8		HARDENED FLATWASHER, .375 DIA	STEEL ZNC PLTD	
23.00	8		SHCS, .312-18NC X 2.0 LG	AISI 316 STN STL	
24.00	8		HIGH COLLAR LOCK WASHER, .313 DIA	AISI 316 STN STL	
25.00	4		HHCS, .250-20NC X 1.25 LG	AISI 316 STN STL	
26.00	4		LOCKWASHER, .250 DIA	AISI 316 STN STL	
27.00	2		MALE CONNECTOR - BSPP TO JIC PARKER P/N: 6F40MXS		
28.00	2	YMD-10089	GASKET - SAE "D" 4-BOLT	COMMERCIAL	0
29.00			NOT USED		
30.00	12 FT		SEAMLESS HYDRAULIC TUBING 0.375" O.D. X .035" WALL	AISI A213 316 STN STL	
31.00	10	0318-06-SS	TUBE NUT	BRENNAN IND.	0
32.00	10	0319-06-SS	TUBE SLEEVE	BRENNAN IND.	0

OFFICIAL COPY - 01.17730.0038 - VDB004 - 1 - Approved(A) - - - 06-Jan-2010 06:03 PM

APPLETON MARINE, INC.

Code ID NO. 70433

PARTS LIST FOR:
MAIN WINCH ASSEMBLY
AMD-2013
Customer: SBM OFFSHORE GROUP

S.O. NO. 15940
B.M. SERIES 7

Date Run: 10/2/2009
Prep'd By: KEG

ITEM	*QTY*	*PART NO.*	*DESCRIPTION*	*MAT'L / VENDER*	*WT(LBS)*
33.00	6 FT		SEAMLESS HYDRAULIC TUBING 0.75" O.D. X .065" WALL	AISI A213 316 STN STL	
34.00	2	0318-12-SS	TUBE NUT	BRENNAN IND.	0
35.00	2	0319-12-SS	TUBE SLEEVE	BRENNAN IND.	0
36.00	1	JMD-1940	53.81" WIRE ROPE RETAINER	WELDMENT	36
37.00	4 FT		OIL-FILLED CAST NYLON BAR MCMASTER P/N: 2858K83	COMMERCIAL	
38.00	6		SHCS, .375-16NC X 2.0 LG	AISI 316 STN STL	
39.00	6		HIGH COLLAR LOCKWASHER, .375 DIA	AISI 316 STN STL	
40.00	6		HEX NUT, .375-16NC	AISI 316 STN STL	
41.00	4		HHCS, .500-13NC X 1.5 LG	AISI 316 STN STL	
42.00	4		LOCKWASHER, .500 DIA	AISI 316 STN STL	
43.00	5	6801-06-06-NWO-SS	STRAIGHT THREAD O-RING ELBOW	BRENNAN IND.	0
44.00	1	6804-060606-NWO-SS	O-RING RUN TEE	BRENNAN IND.	0
45.00	2	6500-06-06-SS	SWIVEL NUT ELBOW	BRENNAN IND.	0
46.00	2	6400-12-10-O-SS	STR. THREAD O-RING CONNECTOR	BRENNAN IND.	0
47.00	2	6600-12-12-12-SS	UNION BRANCH SWIVEL TEE	BRENNAN IND.	0
48.00	2	2406-12-06-SS	TUBE REDUCER	BRENNAN IND.	0

OFFICIAL COPY - 01.17730.0038 - VDB004 - 1 - Approved(A) - - - 06-Jan-2010 06:03 PM

APPLETON MARINE, INC.

Code ID NO. 70433

PARTS LIST FOR:
MAIN WINCH ASSEMBLY
AMD-2013
Customer: SBM OFFSHORE GROUP

S.O. NO. 15940
B.M. SERIES 7

Date Run: 10/2/2009
Prep'd By: KEG

ITEM	*QTY*	*PART NO.*	*DESCRIPTION*	*MAT'L / VENDER*	*WT(LBS)*
49.00	1	6602-12-12-12	SWIVEL NUT RUN TEE	BRENNAN IND.	0
50.00	2	YMD-9759	VENT RELIEF VALVE (WINCH)	COMMERCIAL	0
51.00	2		MALE CONNECTOR - BSPT TO JIC PARKER P/N: 8-8FSMXS		
52.00	2	2405-08-06-SS	FEMALE CONNECTOR	BRENNAN IND.	0
53.00	2	5406-06-02-SS	PIPE BUSHING	BRENNAN IND.	0

OFFICIAL COPY - 01.17730.0038 - VDB004 - 1 - Approved(A) - - - 06-Jan-2010 06:03 PM

REVISIONS							
NO.	SHT.	ZONE	DESCRIPTION	BY	CKD.	APPR.	DATE
1	1		REVISED TO AS-BUILT	AJK			23JUL09

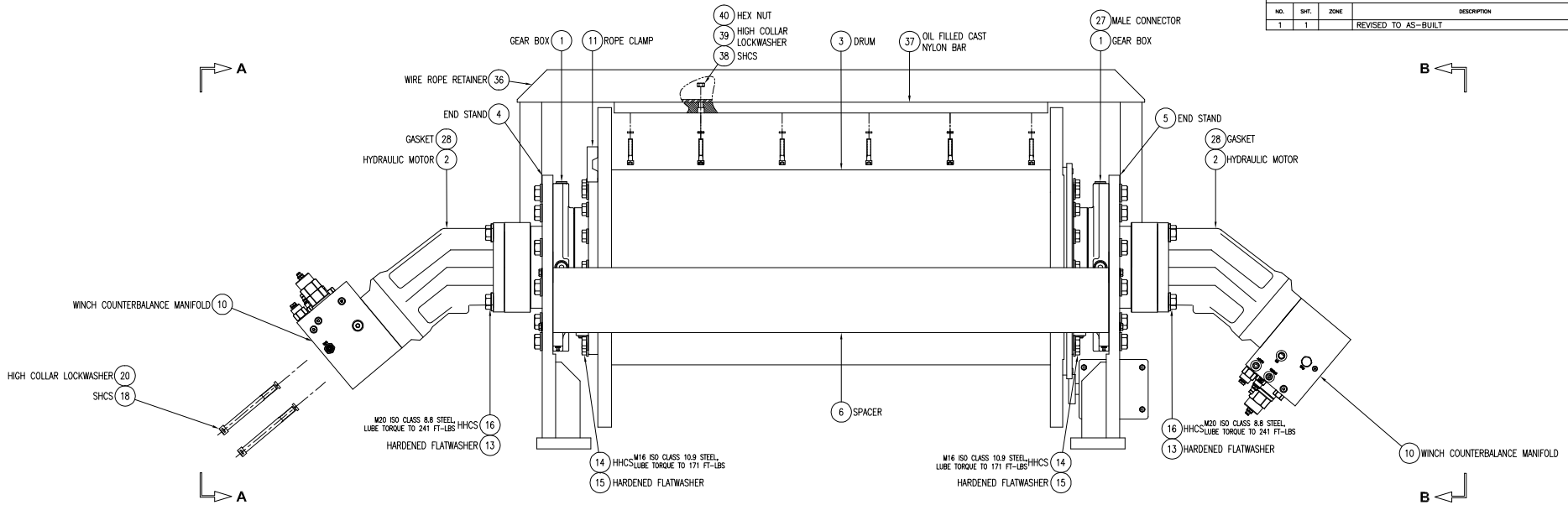

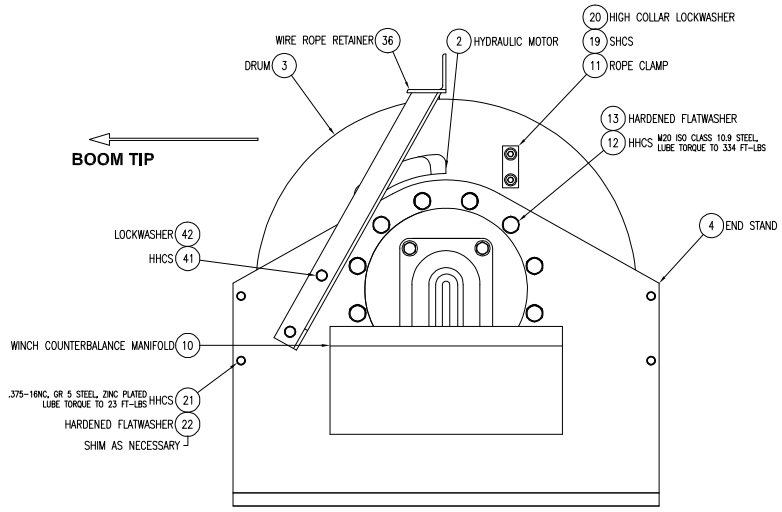

VIEW A-A

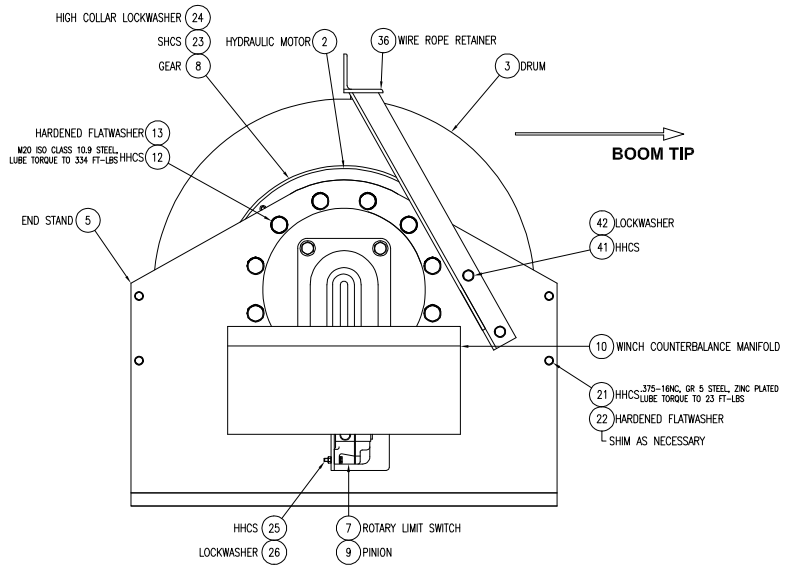

VIEW B-B

AMI NOTE: BOTH WINCH GEARBOXES (ITEM 1) ARE PURCHASED WITH A SPRAGUE CLUTCH IN THE SAME DIRECTION. ONE GEARBOX WILL NEED TO BE DISASSEMBLED AND THE SPRAGUE CLUTCH WILL NEED TO BE REVERSED AND THEN REASSEMBLED FOR PROPER WINCH OPERATION.

REFERENCE 15940

TOLERANCES UNLESS OTHERWISE SPECIFIED
.X ± .030
.XX ± .015
.XXX ± .005
WELDMENTS ± .06
CHAMFERS .06 X 45°
ANGLES ± 1°
BREAK ALL SHARP EDGES
MATERIAL
ASSEMBLY

DRAWN	JJZ	25JAN09
CHECKED	MJB	28APR09
APPROVED	KEG	29APR09

APPLETON MARINE, INC.

MAIN WINCH ASSEMBLY

SIZE	CODE IDENT. NO.	DRAWING NO.	REV.
D	70433	AMD-2013	1

SCALE 1:5 | EST. WEIGHT 2,415 LBS | SHEET 1 OF 2

8 | 7 | 6 | 5 | 4 | 3 | 2 | 1

OFFICIAL COPY - 01.17730.0038 - VDB004 - 1 - Approved(A) - - - 06-Jan-2010 06:03 PM

REVISIONS							
NO.	SHT.	ZONE	DESCRIPTION	BY	CKD.	APPR.	DATE
1	2		REVISED TO AS-BUILT	AJK			23JUL09

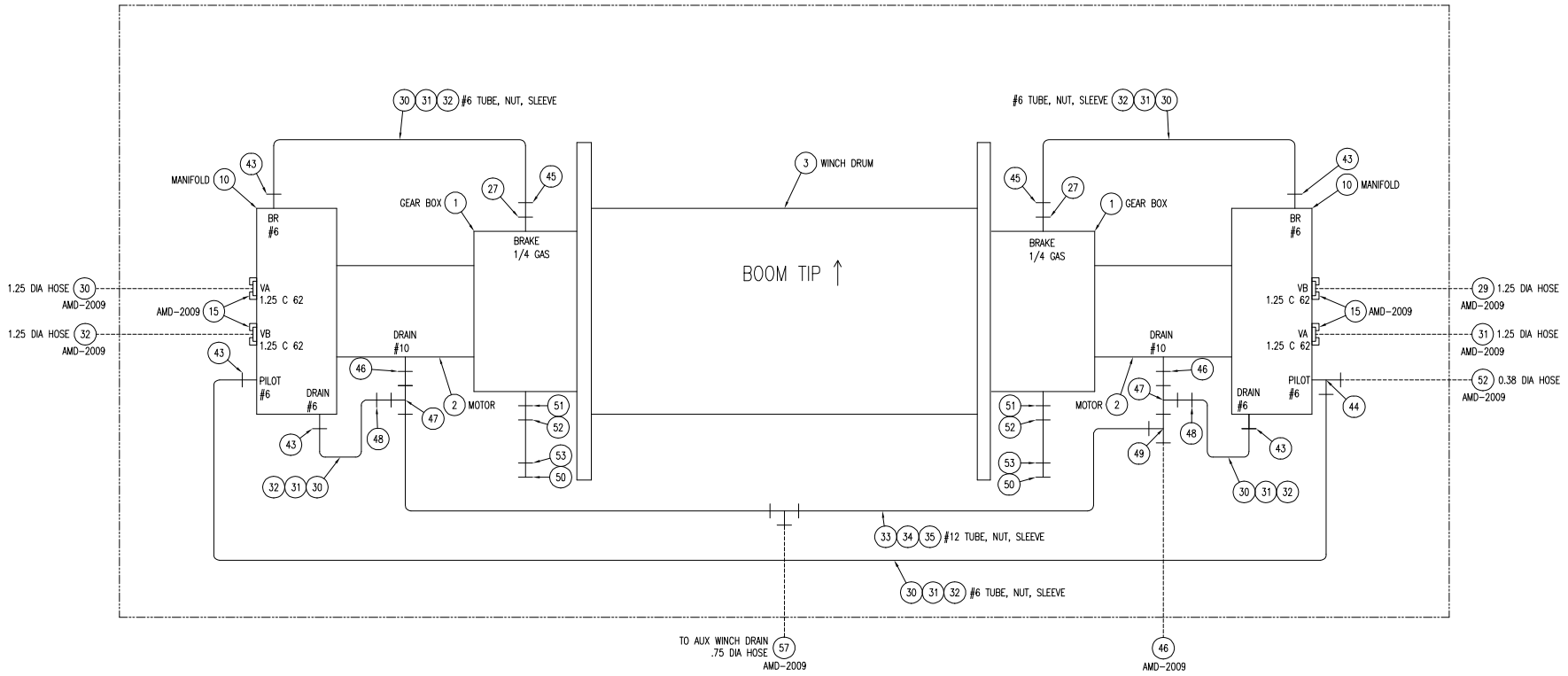

SEE AMD-2009 FOR HOSE ASSEMBLY CONNECTIONS TO CRANE

TOLERANCES UNLESS OTHERWISE SPECIFIED .X ± .030, .XX ± .015, .XXX ± .005; WELDMENTS ± .06, CHAMFERS .06 X 45°, ANGLES ± 1°; BREAK ALL SHARP EDGES; MATERIAL: ASSEMBLY		APPLETON MARINE, INC.
DRAWN AJK 30MAR09; CHECKED MJB 28APR09; APPROVED KEG 29APR09		MAIN WINCH ASSEMBLY
	SIZE D; CODE IDENT. NO. 70433; DRAWING NO. AMD-2013; REV. 1	
	SCALE N/A; EST. WEIGHT 2,415 LBS; SHEET 2 OF 2	

REFERENCE 15940

OFFICIAL COPY - 01.17730.0038 - VDB004 - 1 - Approved(A) - - - 06-Jan-2010 06:03 PM

APPLETON MARINE, INC.

Code ID NO. 70433

PARTS LIST FOR:
AUX WINCH ASSEMBLY
AMD-2007
Customer: SBM OFFSHORE GROUP

S.O. NO. 15940
B.M. SERIES 8

Date Run: 10/2/2009
Prep'd By: KEG

ITEM	*QTY*	*PART NO.*	*DESCRIPTION*	*MAT'L / VENDER*	*WT(LBS)*
1.00	1	YMD-10702	GEAR BOX WITH SPRAG CLUTCH/BRAKE	COMMERCIAL	415
2.00	1	YMD-9055	HYDRAULIC MOTOR	COMMERCIAL	141
3.00	1	DMD-3346	DRUM	WELDMENT	830
4.00	1	DMD-3347	END STAND	WELDMENT	253
5.00	1	DMD-3348	END STAND	WELDMENT	270
6.00	2	MMD-4696	SPACER	ASTM A36	38
7.00	1	YMD-9962	ROTARY LIMIT SWITCH	COMMERCIAL	4
8.00	1	GMD-0296	GEAR	NYLON	9
9.00	1	GMD-0297	PINION	NYLON	2
10.00	1	YMD-10722	WINCH COUNTERBALANCE VALVE	COMMERCIAL	50
11.00	1	MMD-2217	ROPE CLAMP	ASTM A36	1
12.00	1	JMD-1774	BEARING HOUSING	ASTM A36	25
13.00	1	YMD-10250	SPHERICAL BEARING	COMMERCIAL	8
14.00	1	YMD-10251	SHAFT SEAL	COMMERCIAL	0
15.00	1	MMD-4439	COVER, HOUSING	ASTM 36	3
16.00	1	MMD-4440	BEARING RETAINER	ASTM A36	1

OFFICIAL COPY - 01.17730.0038 - VDB004 - 1 - Approved(A) - - - 06-Jan-2010 06:03 PM

APPLETON MARINE, INC.

Code ID NO. 70433

PARTS LIST FOR:
AUX WINCH ASSEMBLY
AMD-2007
Customer: SBM OFFSHORE GROUP

S.O. NO. 15940
B.M. SERIES 8

Date Run: 10/2/2009
Prep'd By: KEG

ITEM	*QTY*	*PART NO.*	*DESCRIPTION*	*MAT'L / VENDER*	*WT(LBS)*
17.00	20		HHCS, M20 X 50 MM	ISO CLASS 10.9 ZNC PLTD	
18.00	20		HARDENED FLATWASHER, M20 DIA	STEEL ZNC PLTD	
19.00	24		HHCS, M16 X 50 MM	ISO CLASS 10.9 ZNC PLTD	
20.00	24		HARDENED FLATWASHER, M16 DIA	STEEL ZNC PLTD	
21.00	8		HHCS, .375-16NC X 2.25 LG	GRADE 5 STL ZNC PLTD	
22.00	8		HARDENED FLATWASHER, .375 DIA	STEEL ZNC PLTD	
23.00	2		SHCS, .500-13NC X 2.00 LG	AISI 316 STN STL	
24.00	2		HIGH COLLAR LOCKWASHER, .500 DIA	AISI 316 STN STL	
25.00	6		HHCS .500-13NC X 1.75 LG	AISI 316 STN STL	
26.00	10		LOCKWASHER .500 DIA	AISI 316 STN STL	
27.00	2		HHCS .375-16NC X 1.00 LG	AISI 316 STN STL	
28.00	2		LOCKWASHER .375 DIA	AISI 316 STN STL	
29.00	8		SHCS, .313-18NC X 1.25 LG	AISI 316 STN STL	
30.00	8		HIGH COLLAR LOCK WASHER, .313 DIA	AISI 316 STN STL	
31.00	6		HHCS .313-18NC X .75 LG	AISI 316 STN STL	
32.00	6		LOCKWASHER .313 DIA	AISI 316 STN STL	

OFFICIAL COPY - 01.17730.0038 - VDB004 - 1 - Approved(A) - - - 06-Jan-2010 06:03 PM

APPLETON MARINE, INC.

Code ID NO. 70433

PARTS LIST FOR:
AUX WINCH ASSEMBLY
AMD-2007
Customer: SBM OFFSHORE GROUP

S.O. NO. 15940
B.M. SERIES 8

Date Run: 10/2/2009
Prep'd By: KEG

ITEM	*QTY*	*PART NO.*	*DESCRIPTION*	*MAT'L / VENDER*	*WT(LBS)*
33.00	4		HHCS, .250-20NC X 1.25 LG	AISI 316 STN STL	
34.00	4		LOCKWASHER, .250 DIA	AISI 316 STN STL	
35.00	1		MALE CONNECTOR - BSPP TO JIC PARKER P/N: 6F40MXS	COMMERCIAL	
36.00	1	YMD-10089	GASKET - SAE "D" 4-BOLT	COMMERCIAL	0
37.00	1	MMD-4800	WINCH SIDE PLATE COVER	ASTM A36	7
38.00	1	MMD-4801	WINCH SIDE PLATE GASKET	NEOPRENE	1
39.00			NOT USED		
40.00	3 FT		SEAMLESS HYDRAULIC TUBING 0.375" O.D. X .035" WALL	AISI A213 316 STN STL	
41.00	4	0318-06-SS	TUBE NUT	BRENNAN IND.	0
42.00	4	0319-06-SS	TUBE SLEEVE	BRENNAN IND.	0
43.00	1	JMD-1941	31.56" WIRE ROPE RETAINER	WELDMENT	27
44.00	4 FT		OIL-FILLED CAST NYLON BAR MCMASTER P/N: 2858K83	COMMERCIAL	
45.00	4		SHCS, .375-16NC X 2.0 LG	AISI 316 STN STL	
46.00	4		HIGH COLLAR LOCKWASHER, .375 DIA	AISI 316 STN STL	
47.00	4		HEX NUT, .375-16NC	AISI A213 316 STN STL	
48.00	4		HHCS, .500-13NC X 1.5 LG	AISI 316 STN STL	

OFFICIAL COPY - 01.17730.0038 - VDB004 - 1 - Approved(A) - - - 06-Jan-2010 06:03 PM

APPLETON MARINE, INC.

Code ID NO. 70433

PARTS LIST FOR:
AUX WINCH ASSEMBLY
AMD-2007
Customer: SBM OFFSHORE GROUP

S.O. NO. 15940
B.M. SERIES 8

Date Run: 10/2/2009
Prep'd By: KEG

ITEM	*QTY*	*PART NO.*	*DESCRIPTION*	*MAT'L / VENDER*	*WT(LBS)*
49.00	8		SHCS, .500-13NC X 6.00 LG	STL PLAIN FINISH	
50.00	8		HIGH COLLAR LOCKWASHER, 500 DIA	STEEL ZNC PLTD	
51.00	2	6801-06-06-NWO-SS	STRAIGHT THREAD O-RING ELBOW	BRENNAN IND.	0
52.00	1	6500-06-06-SS	SWIVEL NUT ELBOW	BRENNAN IND.	0
53.00	2	6400-06-06-O-SS	STR. THREAD O-RING CONNECTOR	BRENNAN IND.	0
54.00	1	6803-121212-NWO-SS	O-RING BRANCH TEE	BRENNAN IND.	0
55.00	1	2406-12-06-SS	TUBE REDUCER	BRENNAN IND.	0
56.00	1	YMD-9759	VENT RELIEF VALVE (WINCH)	COMMERCIAL	0
57.00	1		MALE CONNECTOR - BSPT TO JIC PARKER P/N: 8-8FSMXS		0
58.00	1	2405-08-06-SS	FEMALE CONNECTOR	BRENNAN IND.	0
59.00	1	5406-06-02-SS	PIPE BUSHING	BRENNAN IND.	0

OFFICIAL COPY - 01.17730.0038 - VDB004 - 1 - Approved(A) - - - 06-Jan-2010 06:03 PM

REVISIONS							
NO.	SHT.	ZONE	DESCRIPTION	BY	CKD.	APPR.	DATE
1	1		REVISED TO AS-BUILT	AJK			23JUL09

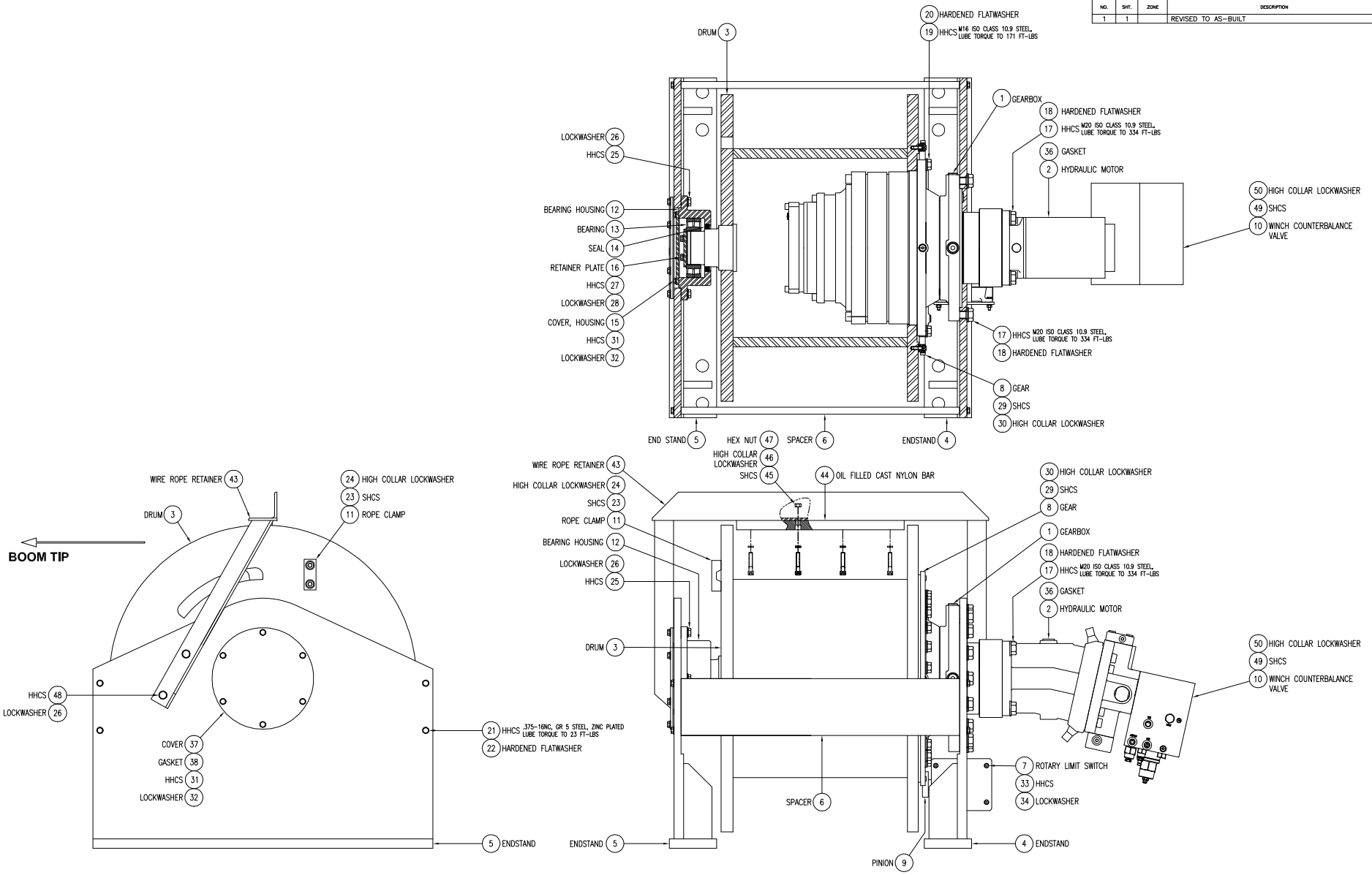

REFERENCE 15940

TOLERANCES UNLESS OTHERWISE SPECIFIED			
.X ± .030			
.XX ± .015			
.XXX ± .005			
WELDMENTS ± .06			
CHAMFERS .06 X 45°			
ANGLES ± 1°			
BREAK ALL SHARP EDGES			
MATERIAL: ASSEMBLY			
DRAWN	JJZ	02MAR09	
CHECKED	MJB	28APR09	
APPROVED	KEG	29APR09	

APPLETON MARINE, INC.

AUX WINCH ASSEMBLY

SIZE	CODE IDENT. NO.	DRAWING NO.	REV.
D	70433	AMD-2007	1

SCALE	EST. WEIGHT	SHEET
1:5	2,150 LBS	1 OF 2

OFFICIAL COPY - 01.17730.0038 - VDB004 - 1 - Approved(A) - - - 06-Jan-2010 06:03 PM

REVISIONS							
NO.	SHT.	ZONE	DESCRIPTION	BY	CKD.	APPR.	DATE
1	2		REVISED TO AS-BUILT	AJK			23JUL09

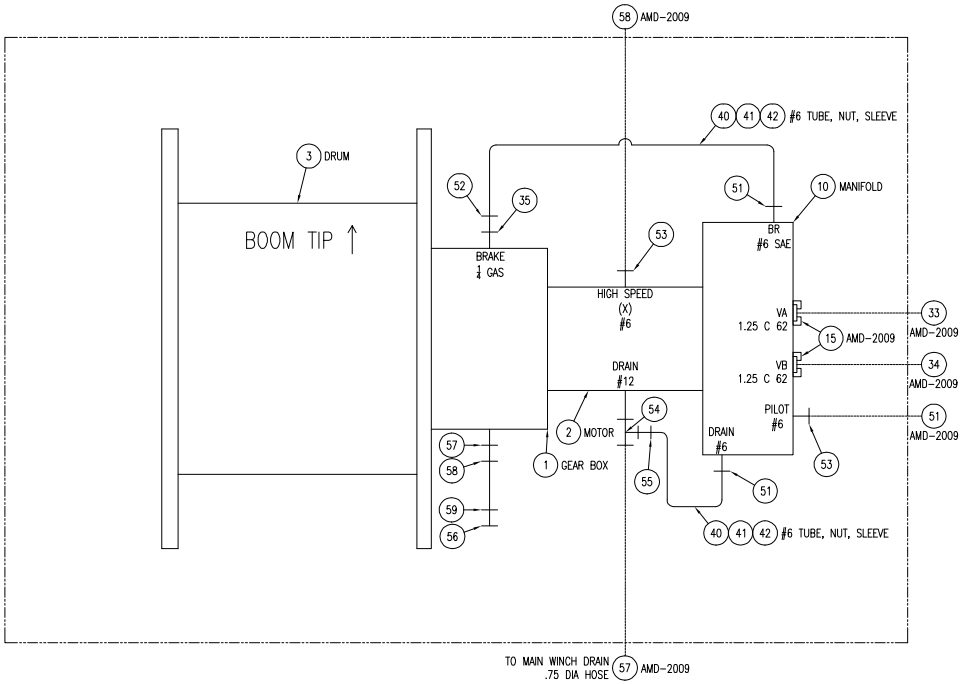

SEE AMD-2009 FOR HOSE ASSEMBLY CONNECTIONS TO CRANE

REFERENCE 15940

TOLERANCES UNLESS OTHERWISE SPECIFIED			
.X ± .030			
.XX ± .015			
.XXX ± .005			
WELDMENTS ± .06			
CHAMFERS .06 X 45°			
ANGLES ± 1°			
BREAK ALL SHARP EDGES			
MATERIAL			
ASSEMBLY			
DRAWN	AJK	30MAR09	
CHECKED	MJB	28APR09	
APPROVED	KEG	29APR09	

APPLETON MARINE, INC.

AUX WINCH ASSEMBLY

SIZE	CODE IDENT. NO.	DRAWING NO.	REV.
D	70433	AMD-2007	1

SCALE	EST. WEIGHT	SHEET
N/A	2,150 LBS	2 OF 2

OFFICIAL COPY - 01.17730.0038 - VDB004 - 1 - Approved(A) - - - 06-Jan-2010 06:03 PM

APPLETON MARINE, INC.

SBM OFFSHORE

FPSO P57

BR PETROBRAS NETHERLANDS B.V.

Project Title: FPSO P57

01.17730.0038	BA	002	05	X-G0520
P.O. Number	CDR Code	Sequence Number	Doc. Rev	Tag No.

Document Title: Electric Schematic

Crane Serial Number: 15940

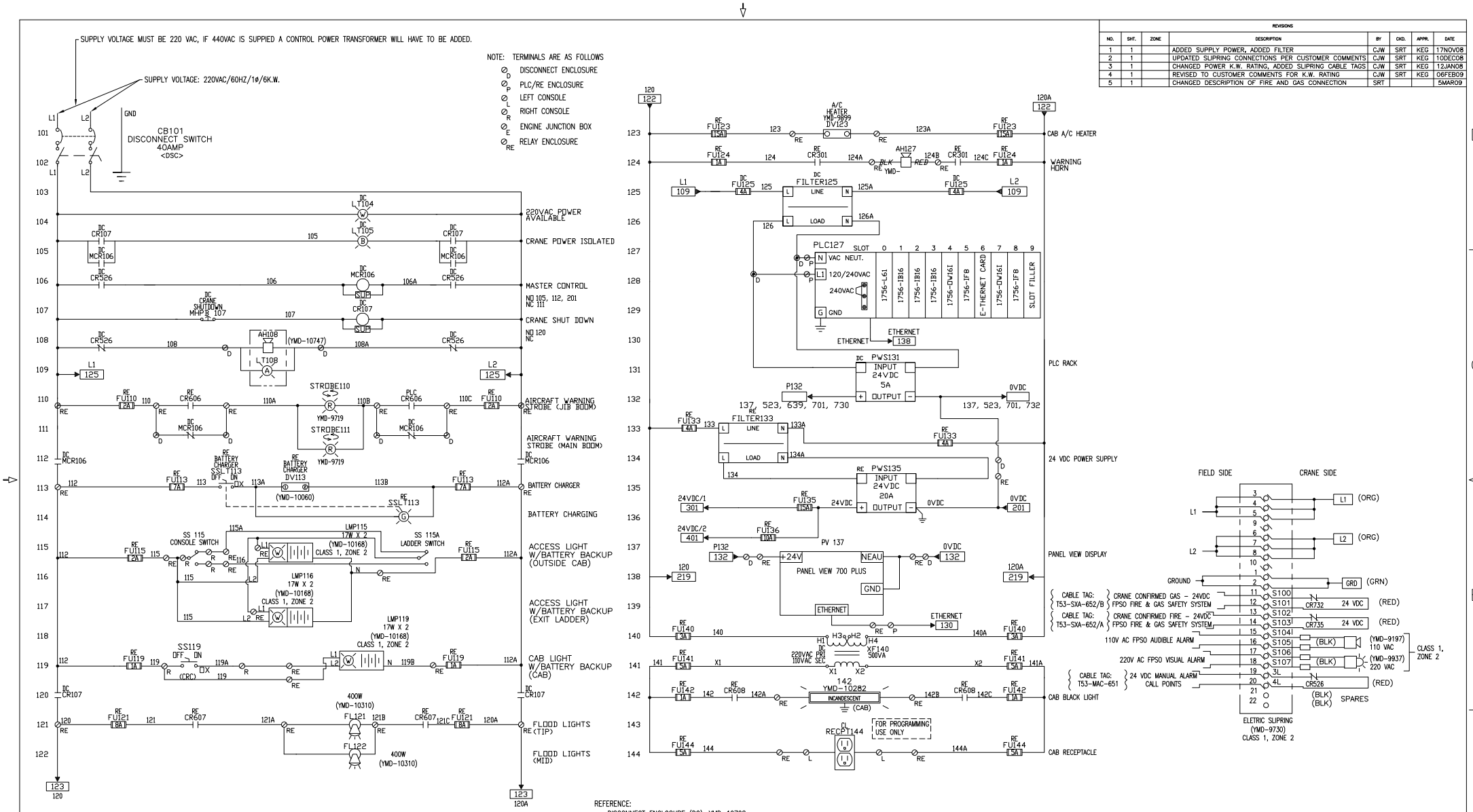

REVISIONS						
NO.	SHT.	ZONE	DESCRIPTION	BY	CKD.	APPR.	DATE
1	1		ADDED SUPPLY POWER, ADDED FILTER	CJW	SRT	KEG	17NOV08
2	1		UPDATED SLIPRING CONNECTIONS PER CUSTOMER COMMENTS	CJW	SRT	KEG	10DEC08
3	1		CHANGED POWER K.W. RATING, ADDED SLIPRING CABLE TAGS	CJW	SRT	KEG	12JAN08
4	1		REVISED TO CUSTOMER COMMENTS FOR K.W. RATING	CJW	SRT	KEG	06FEB09
5	1		CHANGED DESCRIPTION OF FIRE AND GAS CONNECTION	SRT			5MAR09

REFERENCE 15940

TOLERANCES UNLESS OTHERWISE SPECIFIED
.X ± .030
.XX ± .015
.XXX ± .005
WELDMENTS ± .06
CHAMFERS .06 X 45°
ANGLES ± 1°
BREAK ALL SHARP EDGES
MATERIAL SCHEMATIC

DRAWN	CJW	06NOV08
CHECKED	SRT	06NOV08
APPROVED	KEG	06NOV08

APPLETON MARINE, INC.

ELECTRIC SCHEMATIC
MODEL – SB750-115

SIZE	CODE IDENT. NO.	DRAWING NO.	REV.
D	70433	CMD-0758	5

SCALE | EST. WEIGHT | SHEET 1 OF 7

OFFICIAL COPY - 01.17730.0038 - VDB004 - 1 - Approved(A) - - - 06-Jan-2010 06:03 PM

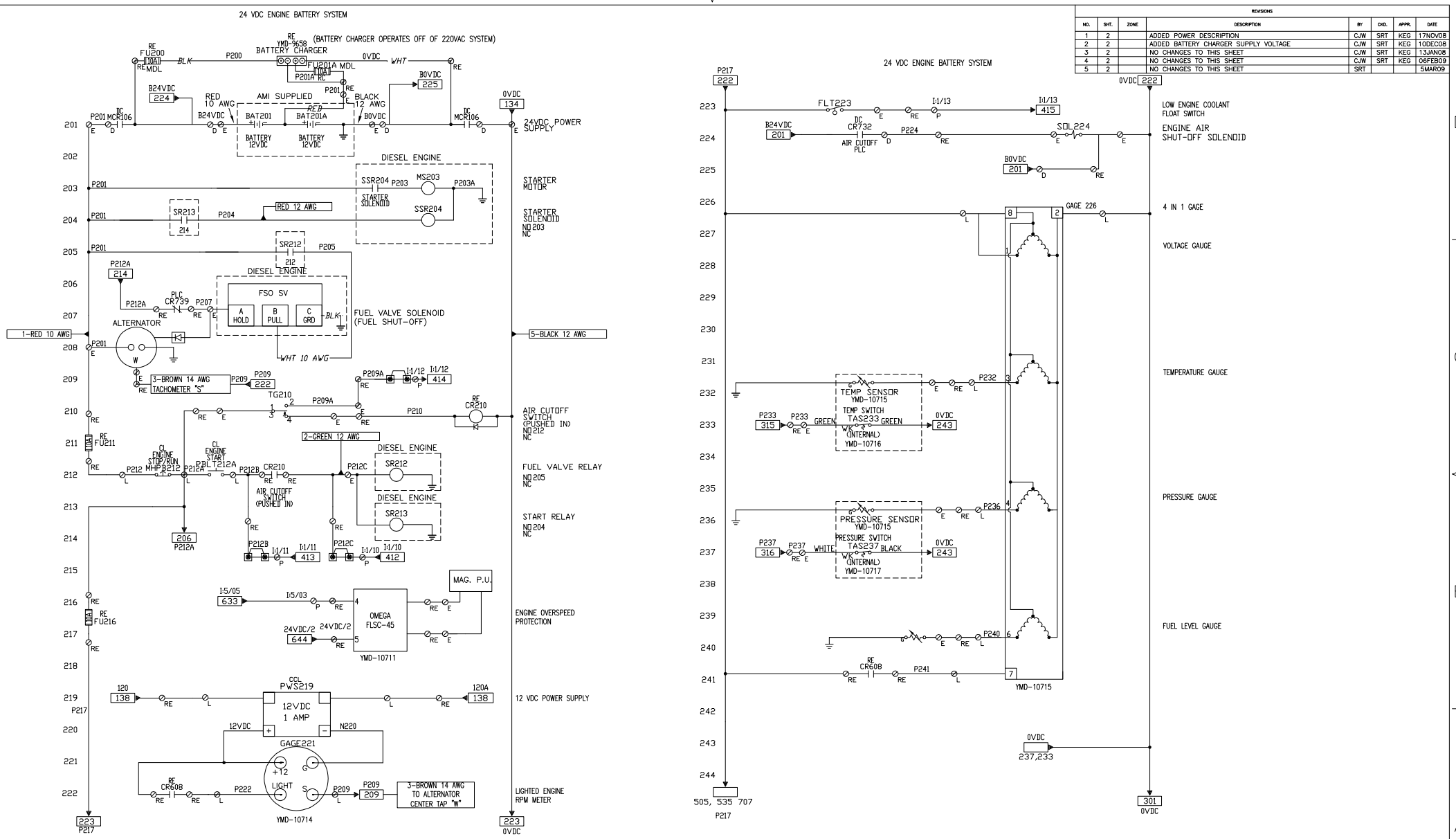

REVISIONS						
NO.	SHT.	ZONE	DESCRIPTION	BY	CKD.	APPR.	DATE
1	2		ADDED POWER DESCRIPTION	CJW	SRT	KEG	17NOV08
2	2		ADDED BATTERY CHARGER SUPPLY VOLTAGE	CJW	SRT	KEG	10DEC08
3	2		NO CHANGES TO THIS SHEET	CJW	SRT	KEG	13JAN08
4	2		NO CHANGES TO THIS SHEET	CJW	SRT	KEG	06FEB09
5	2		NO CHANGES TO THIS SHEET	SRT			5MAR09

TOLERANCES UNLESS OTHERWISE SPECIFIED
.X ± .030
.XX ± .015
.XXX ± .005
WELDMENTS ± .06
CHAMFERS .06 X 45°
ANGLES ± 1°
BREAK ALL SHARP EDGES
MATERIAL
SCHEMATIC

DRAWN	CJW	06NOV08
CHECKED	SRT	06NOV08
APPROVED	KEG	06NOV08

APPLETON MARINE, INC.

ELECTRIC SCHEMATIC
MODEL – SB750-115

SIZE	CODE IDENT. NO.	DRAWING NO.	REV.
D	70433	CMD-0758	5

SCALE | EST. WEIGHT | SHEET 2 OF 7

OFFICIAL COPY - 01.17730.0038 - VDR004 - 1 - Approved(A) - - - 06-Jan-2010 06:03 PM

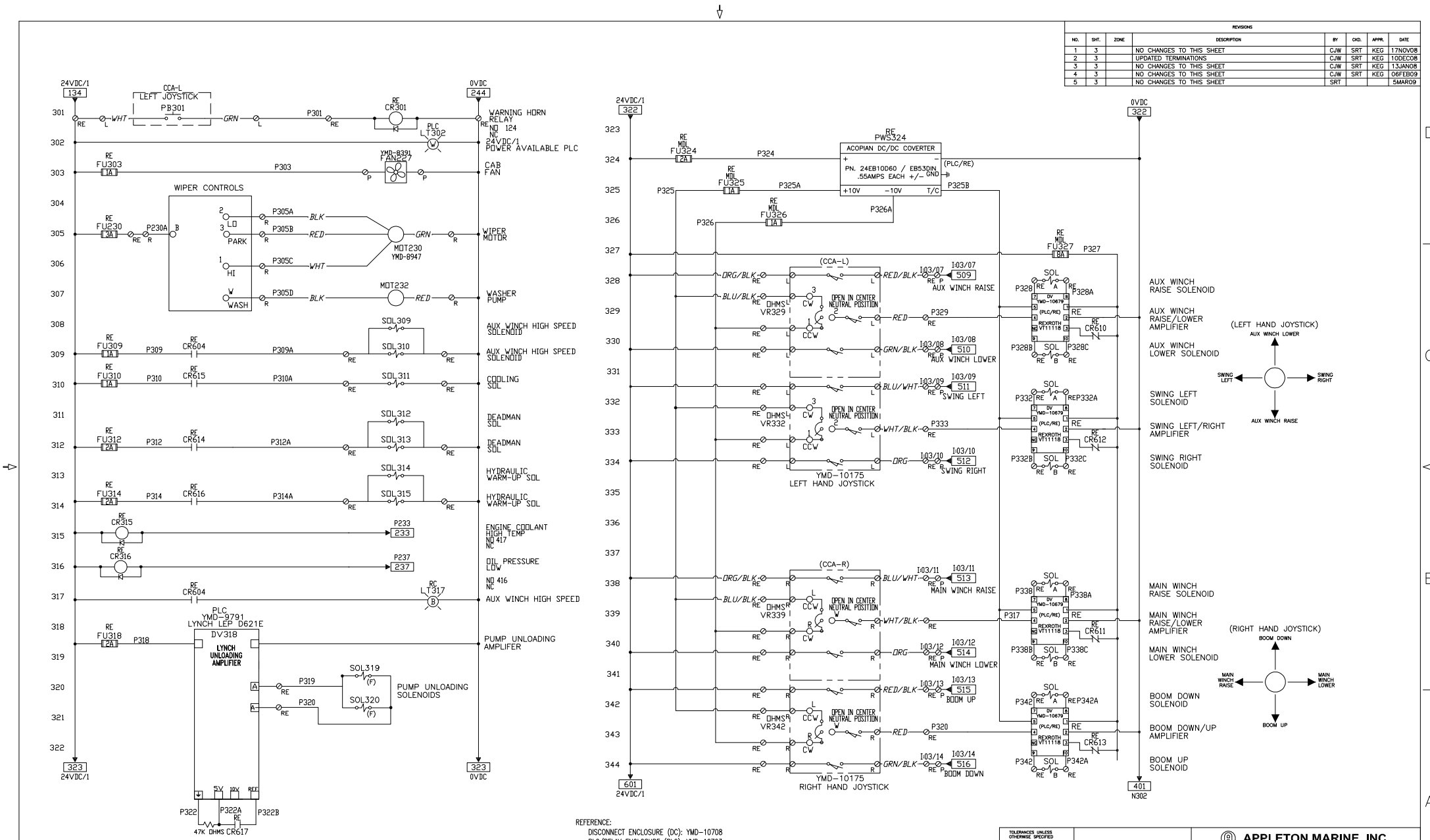

REVISIONS							
NO.	SHT.	ZONE	DESCRIPTION	BY	CKD.	APPR.	DATE
1	3		NO CHANGES TO THIS SHEET	CJW	SRT	KEG	17NOV08
2	3		UPDATED TERMINATIONS	CJW	SRT	KEG	10DEC08
3	3		NO CHANGES TO THIS SHEET	CJW	SRT	KEG	13JAN08
4	3		NO CHANGES TO THIS SHEET	CJW	SRT	KEG	06FEB09
5	3		NO CHANGES TO THIS SHEET	SRT			5MAR09

REFERENCE:
DISCONNECT ENCLOSURE (DC): YMD-10708
PLC/RELAY ENCLOSURE (PLC): YMD-10723
RELAY ENCLOSURE (RE): YMD-10751
DISPLAY UNIT ENCLOSURE (DUE): YMD-10734
CONTROL CONSOLE LEFT (CCA-L): AMD-2014
CONTROL CONSOLE RIGHT (CCA-R): AMD-2014

REFERENCE 15940

TOLERANCES UNLESS OTHERWISE SPECIFIED
.X ± .030
.XX ± .015
.XXX ± .005
WELDMENTS ± .06
CHAMFERS .06 X 45°
ANGLES ± 1°
BREAK ALL SHARP EDGES
MATERIAL
SCHEMATIC

DRAWN	CJW	06NOV08
CHECKED	SRT	06NOV08
APPROVED	KEG	06NOV08

APPLETON MARINE, INC.

ELECTRIC SCHEMATIC
MODEL – SB750–115

SIZE	CODE IDENT. NO.	DRAWING NO.	REV.
D	70433	CMD–0758	5

SCALE | EST. WEIGHT | SHEET 3 OF 7

OFFICIAL COPY - 01.17730.0038 - VDB004 - 1 - Approved(A) - - - 06-Jan-2010 06:03 PM

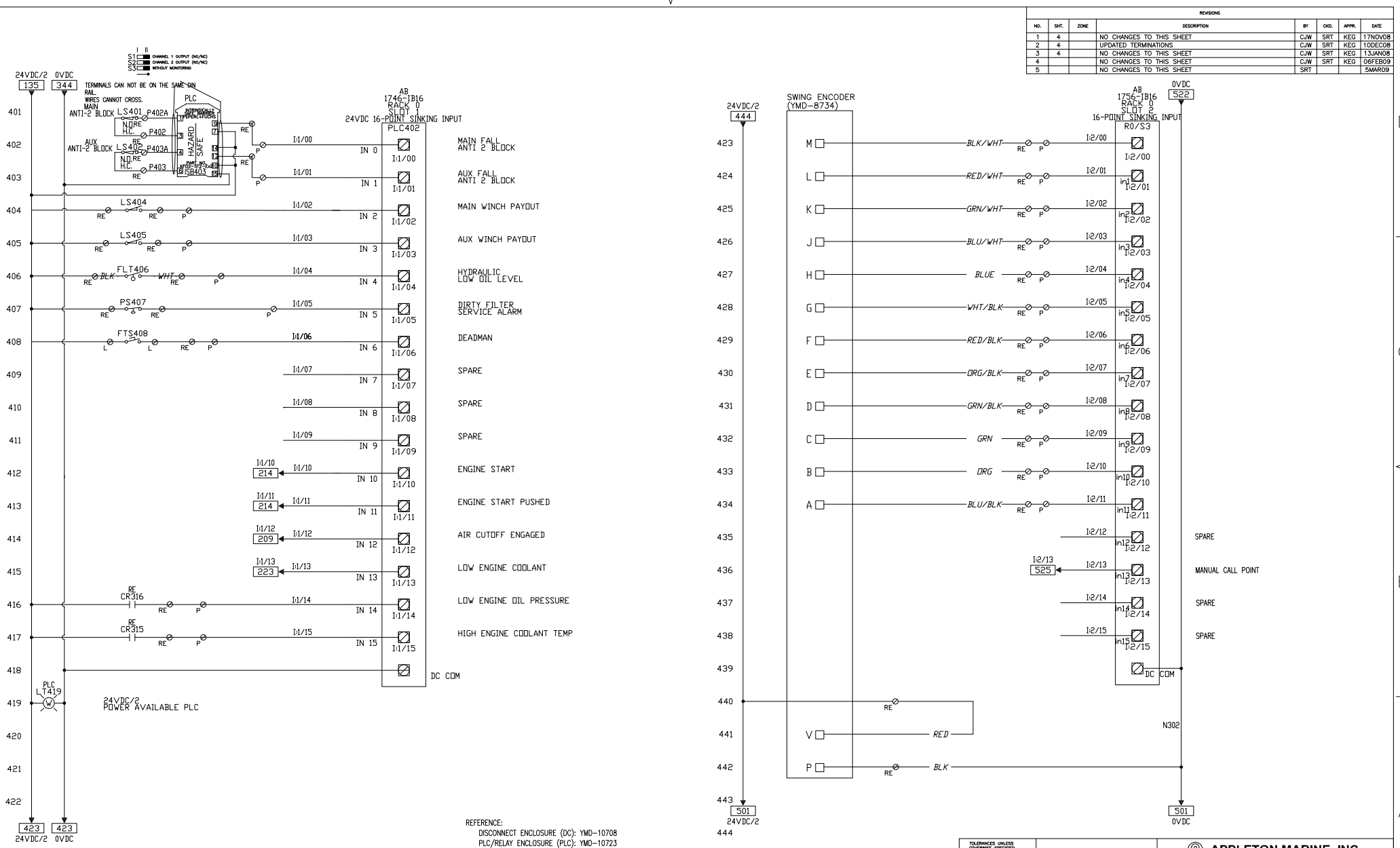

REFERENCE:
DISCONNECT ENCLOSURE (DC): YMD-10708
PLC/RELAY ENCLOSURE (PLC): YMD-10723
RELAY ENCLOSURE (RE): YMD-10751
DISPLAY UNIT ENCLOSURE (DUE): YMD-10734
CONTROL CONSOLE LEFT (CCA-L): AMD-2014
CONTROL CONSOLE RIGHT (CCA-R): AMD-2014

REVISIONS							
NO.	SHT.	ZONE	DESCRIPTION	BY	CKD.	APPR.	DATE
1	4		NO CHANGES TO THIS SHEET	CJW	SRT	KEG	17NOV08
2	4		UPDATED TERMINATIONS	CJW	SRT	KEG	10DEC08
3	4		NO CHANGES TO THIS SHEET	CJW	SRT	KEG	13JAN08
4			NO CHANGES TO THIS SHEET	CJW	SRT	KEG	06FEB09
5			NO CHANGES TO THIS SHEET	SRT			5MAR09

TOLERANCES UNLESS OTHERWISE SPECIFIED
.X ± .030
.XX ± .015
.XXX ± .005
WELDMENTS ± .06
CHAMFERS .06 X 45°
ANGLES ± 1°
BREAK ALL SHARP EDGES
MATERIAL SCHEMATIC

DRAWN	CJW	06NOV08
CHECKED	SRT	06NOV08
APPROVED	KEG	06NOV08

APPLETON MARINE, INC.

ELECTRIC SCHEMATIC
MODEL – SB750-115

SIZE	CODE IDENT. NO.	DRAWING NO.	REV.
D	70433	CMD-0758	5
SCALE	EST. WEIGHT	SHEET	4 OF 7

REFERENCE 15940

OFFICIAL COPY - 01.17730.0038 - VDB004 - 1 - Approved(A) - - - 06-Jan-2010 06:03 PM

OFFICIAL COPY - 01.17730.0038 - VDB004 - 1 - Approved(A) - - - 06-Jan-2010 06:03 PM

REVISIONS							
NO.	SHT.	ZONE	DESCRIPTION	BY	CKD.	APPR.	DATE
1	5		NO CHANGES TO THIS SHEET	CJW	SRT	KEG	17NOV08
2	5		UDPATED TERMINATIONS	CJW	SRT	KEG	10DEC08
3	5		NO CHANGES TO THIS SHEET	CJW	SRT	KEG	13JAN08
4	5		NO CHANGES TO THIS SHEET	CJW	SRT	KEG	06FEB09
5			NO CHANGES TO THIS SHEET	SRT			5MAR09

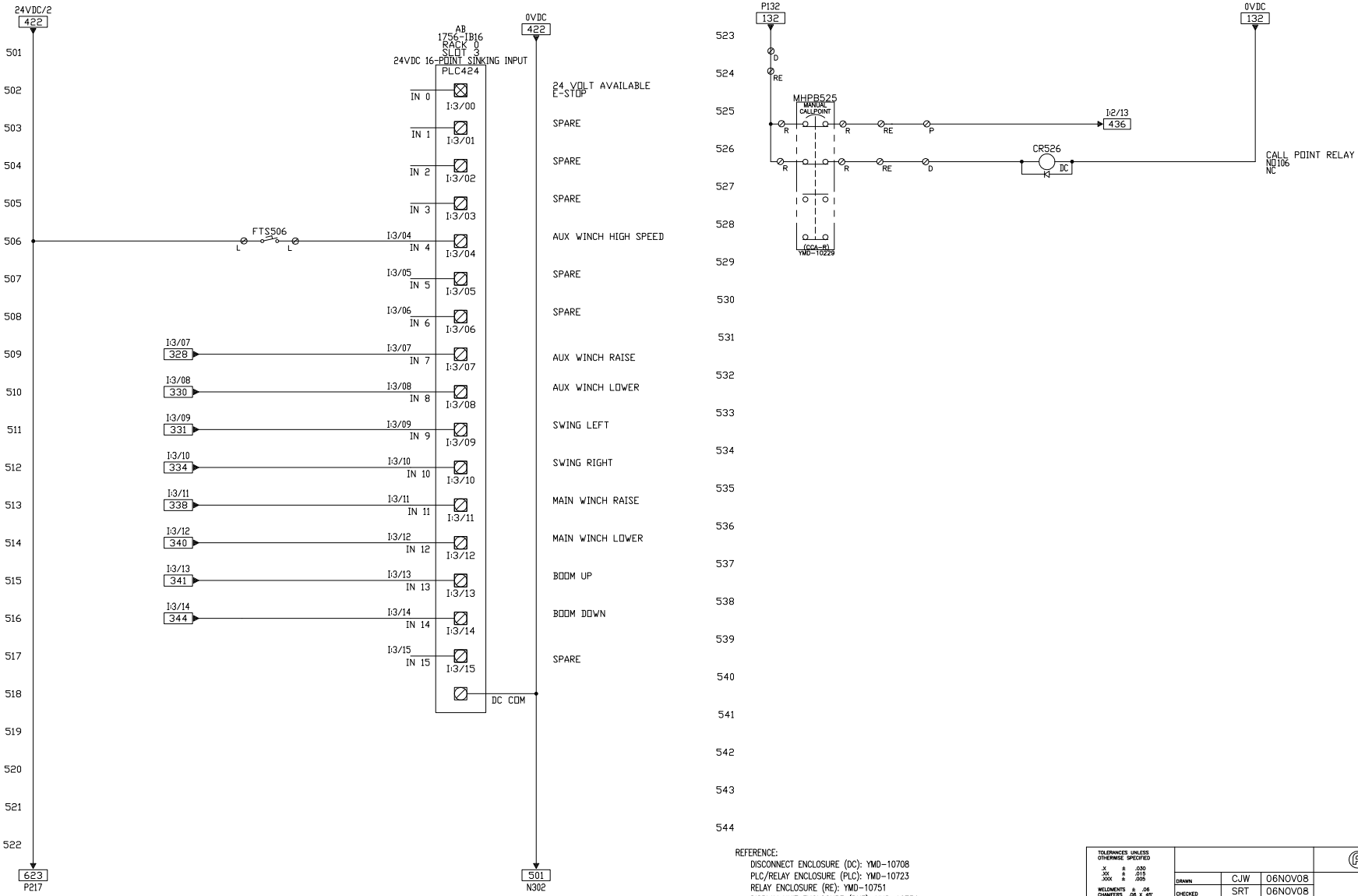

REFERENCE:
DISCONNECT ENCLOSURE (DC): YMD-10708
PLC/RELAY ENCLOSURE (PLC): YMD-10723
RELAY ENCLOSURE (RE): YMD-10751
DISPLAY UNIT ENCLOSURE (DUE): YMD-10734
CONTROL CONSOLE LEFT (CCA-L): AMD-2014
CONTROL CONSOLE RIGHT (CCA-R): AMD-2014

REFERENCE 15940

TOLERANCES UNLESS OTHERWISE SPECIFIED
.X ± .030
.XX ± .015
.XXX ± .005
WELDMENTS ± .06
CHAMFERS .06 X 45°
ANGLES ± 1°
BREAK ALL SHARP EDGES
MATERIAL
SCHEMATIC

DRAWN	CJW	06NOV08
CHECKED	SRT	06NOV08
APPROVED	KEG	06NOV08

APPLETON MARINE, INC.

ELECTRIC SCHEMATIC
MODEL – SB750–115

SIZE	CODE IDENT. NO.	DRAWING NO.	REV.
D	70433	CMD–0758	5

SCALE | EST. WEIGHT | SHEET 5 OF 7

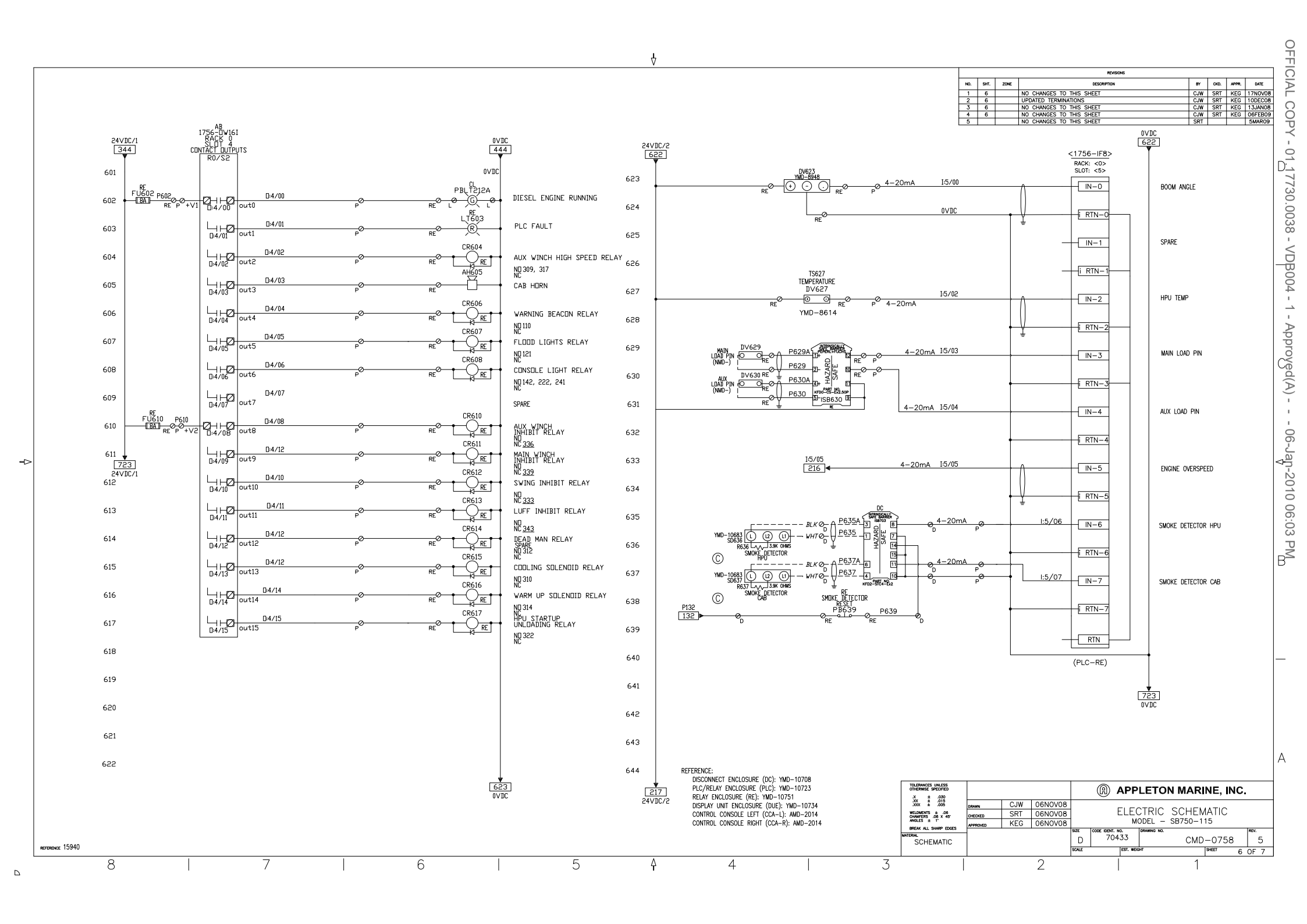

REVISIONS							
NO.	SHT.	ZONE	DESCRIPTION	BY	CKD.	APPR.	DATE
1	6		NO CHANGES TO THIS SHEET	CJW	SRT	KEG	17NOV08
2	6		UPDATED TERMINATIONS	CJW	SRT	KEG	10DEC08
3	6		NO CHANGES TO THIS SHEET	CJW	SRT	KEG	13JAN08
4	6		NO CHANGES TO THIS SHEET	CJW	SRT	KEG	06FEB09
5			NO CHANGES TO THIS SHEET	SRT			5MAR09

TOLERANCES UNLESS OTHERWISE SPECIFIED
.X ± .030
.XX ± .015
.XXX ± .005
WELDMENTS ± .06
CHAMFERS .06 X 45°
ANGLES ± 1°
BREAK ALL SHARP EDGES
MATERIAL
SCHEMATIC

DRAWN	CJW	06NOV08
CHECKED	SRT	06NOV08
APPROVED	KEG	06NOV08

APPLETON MARINE, INC.

ELECTRIC SCHEMATIC
MODEL – SB750-115

SIZE	CODE IDENT. NO.	DRAWING NO.	REV.
D	70433	CMD-0758	5

SCALE | EST. WEIGHT | SHEET 6 OF 7

REFERENCE 15940

OFFICIAL COPY - 01.17730.0038 - VDB004 - 1 - Approved(A) - - - 06-Jan-2010 06:03 PM

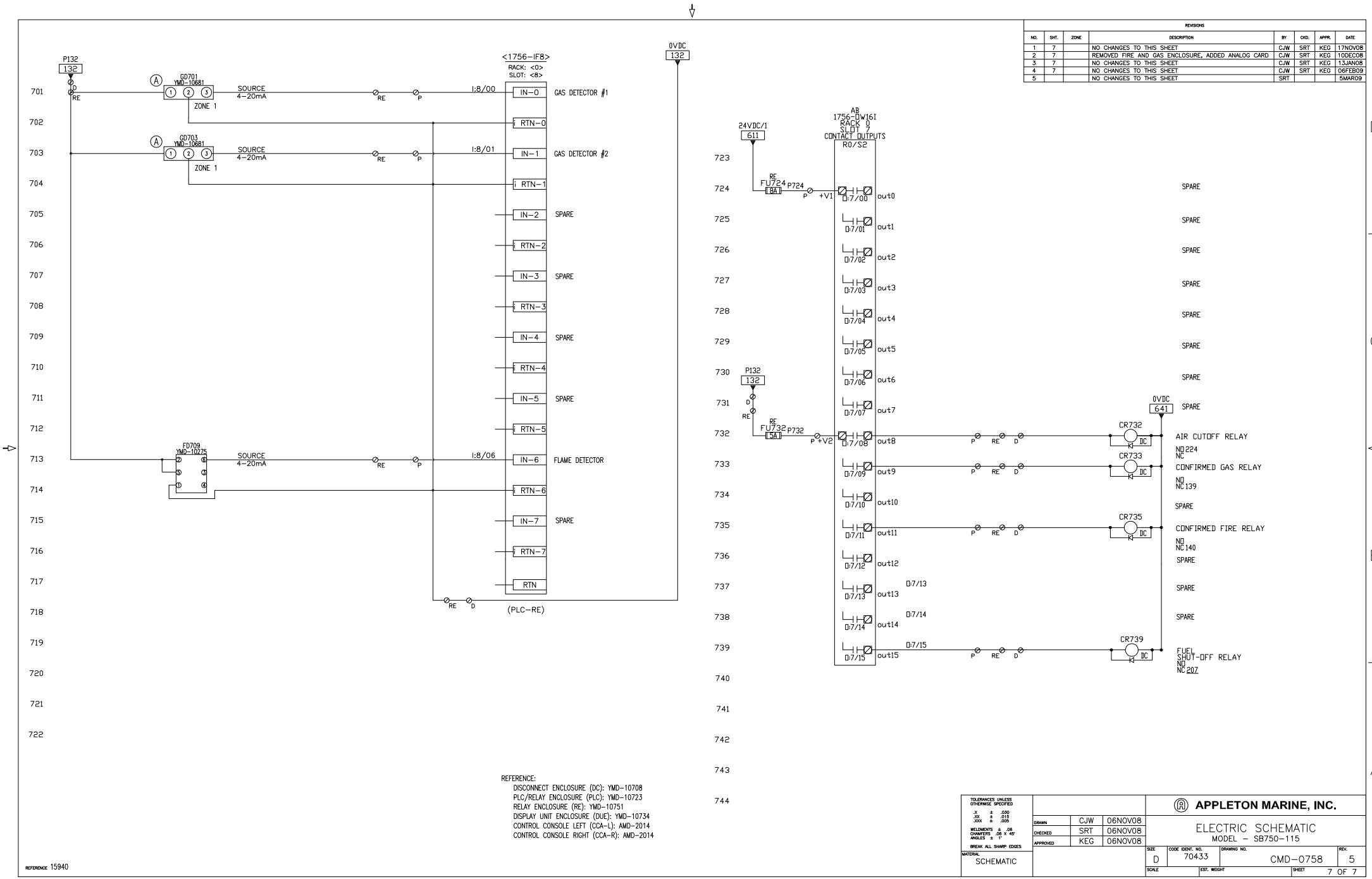

REFERENCE:
DISCONNECT ENCLOSURE (DC): YMD-10708
PLC/RELAY ENCLOSURE (PLC): YMD-10723
RELAY ENCLOSURE (RE): YMD-10751
DISPLAY UNIT ENCLOSURE (DUE): YMD-10734
CONTROL CONSOLE LEFT (CCA-L): AMD-2014
CONTROL CONSOLE RIGHT (CCA-R): AMD-2014

REFERENCE 15940

REVISIONS							
NO.	SHT.	ZONE	DESCRIPTION	BY	CKD.	APPR.	DATE
1	7		NO CHANGES TO THIS SHEET	CJW	SRT	KEG	17NOV08
2	7		REMOVED FIRE AND GAS ENCLOSURE, ADDED ANALOG CARD	CJW	SRT	KEG	10DEC08
3	7		NO CHANGES TO THIS SHEET	CJW	SRT	KEG	13JAN08
4	7		NO CHANGES TO THIS SHEET	CJW	SRT	KEG	06FEB09
5			NO CHANGES TO THIS SHEET	SRT			5MAR09

TOLERANCES UNLESS OTHERWISE SPECIFIED
.X ± .030
.XX ± .015
.XXX ± .005
WELDMENTS ± .06
CHAMFERS .06 X 45°
ANGLES ± 1°
BREAK ALL SHARP EDGES
MATERIAL
SCHEMATIC

DRAWN	CJW	06NOV08
CHECKED	SRT	06NOV08
APPROVED	KEG	06NOV08

APPLETON MARINE, INC.

ELECTRIC SCHEMATIC
MODEL – SB750-115

SIZE	CODE IDENT. NO.	DRAWING NO.	REV.
D	70433	CMD-0758	5

SCALE | EST. WEIGHT | SHEET 7 OF 7

OFFICIAL COPY - 01.17730.0038 - VDB004 - 1 - Approved(A) - - - 06-Jan-2010 06:03 PM

OFFICIAL COPY - 01.17730.0038 - VDB004 - 1 - Approved(A) - - - 06-Jan-2010 06:03 PM

APPLETON MARINE, INC.

SBM OFFSHORE

FPSO P57

BR PETROBRAS NETHERLANDS B.V.

Project Title: FPSO P57

01.17730.0038	BB	002	00	X-G0520
P.O. Number	CDR Code	Sequence Number	Doc. Rev	Tag No.

Document Title: Electric Assembly

Crane Serial Number: 15940

OFFICIAL COPY - 01.17730.0038 - VDB004 - 1 - Approved(A) - - - 06-Jan-2010 06:03 PM

APPLETON MARINE, INC.

Code ID NO. 70433

PARTS LIST FOR:
ELECTRIC ASSEMBLY
AMD-2010
Customer: SBM OFFSHORE GROUP

S.O. NO. 15940
B.M. SERIES 4

Date Run: 10/14/2009
Prep'd By: KEG

ITEM	*QTY*	*PART NO.*	*DESCRIPTION*	*MAT'L / VENDER*	*WT(LBS)*
1.00	2	YMD-10839	SLIP RING JUNCTION BOX	COMMERCIAL	20
2.00	1	YMD-10841	ENGINE JUNCTION BOX	COMMERCIAL	15
3.00	4	YMD-10271	JUNCTION BOX (9 X 6 X 10)	COMMERCIAL	5
4.00	4	YMD-10840	EXD BOOM JUNCTION BOX	COMMERCIAL	25
5.00	75 FT		ELECTRIC CABLE - BFOU 0.6/1 KV 4X6MM^2 DRAKAMOG P/N: 800253	COMMERCIAL	
6.00	250 FT		ELECTRIC CABLE - BFOU 0.6/1 KV 7X1.5MM^2 DRAKAMOG P/N: 800221	COMMERCIAL	
7.00	25 FT		ELECTRIC CABLE - BFOU 0.6/1 KV 12X1.5MM^2 DRAKAMOG P/N: 800222	COMMERCIAL	
8.00	150 FT		ELECTRIC CABLE - BFOU 0.6/1 KV 3X1.5MM^2 DRAKAMOG P/N: 800218	COMMERCIAL	
9.00	75 FT		ELECTRIC CABLE - BFOU 0.6/1 KV 27X1.5MM^2 DRAKAMOG P/N: 800224	COMMERCIAL	
10.00	50 FT		ELECTRIC CABLE - TYPE P 7X10AWG DRAKAMOG P/N: 026322	COMMERCIAL	
11.00	50 FT		ELECTRIC CABLE - BFOU(I) 1 PAIR 1.5 MM^2 DRAKAMOG P/N: 893400	COMMERCIAL	
12.00	75 FT		ELECTRIC CABLE - BFOU(I) 1 PAIR 1.5 MM^2 DRAKAMOG P/N: 893400 WITH BLUE STRIPE	COMMERCIAL	
13.00	50 FT		ELECTRIC CABLE - BFOU(I) 1 TRIAD 1.5 MM^2 DRAKAMOG P/N: 893460	COMMERCIAL	
14.00	50 FT		ELECTRIC CABLE - BFOU(I) 4 PAIR 1.5 MM^2 DRAKAMOG P/N: 893418	COMMERCIAL	
15.00	150 FT		ELECTRIC CABLE - BFOU(I) 4 PAIR 1.5 MM^2 DRAKAMOG P/N: 893418 WITH BLUE STRIPE	COMMERCIAL	
16.00			NOT USED		

OFFICIAL COPY - 01.17730.0038 - VDB004 - 1 - Approved(A) - - - 06-Jan-2010 06:03 PM

APPLETON MARINE, INC.

Code ID NO. 70433

PARTS LIST FOR:
ELECTRIC ASSEMBLY
AMD-2010
Customer: SBM OFFSHORE GROUP

S.O. NO. 15940
B.M. SERIES 4

Date Run: 10/14/2009
Prep'd By: KEG

ITEM	*QTY*	*PART NO.*	*DESCRIPTION*	*MAT'L / VENDER*	*WT(LBS)*
17.00	100 FT		ELECTRIC CABLE - TYPE P CONTROL CABLE 37 CONDUCTOR X 16AWG DRAKAMOG P/N: 026203	COMMERCIAL	
18.00	75 FT		ELECTRIC CABLE 3 CONDUCTOR 16 AWG (.392 DIA) AMERCABLE P/N: 37-102-502	COMMERCIAL	
19.00	50 FT		ELECTRIC CABLE 4 SHEILDED PAIRS, #16 AWG (.650" DIA) AMERCABLE P/N: 37-102-613	COMMERCIAL	
20.00	75 FT		ELECTRIC CABLE 1 SHEILDED PAIR, #16 AWG (.380" DIA) AMERCABLE P/N: 37-102-610	COMMERCIAL	
21.00	25 FT		ELECTRIC CABLE 3 CONDUCTOR 14 AWG (.440 DIA) AMERCABLE P/N: 37-102-508	COMMERCIAL	
22.00	50 FT		ELECTRIC CABLE ENERFLEX 125 TYPE P (.840 DIA) 24 CONDUCTOR, #16 AWG DRAKA P/N: 026201	COMMERCIAL	
23.00	2		CABLE GLAND - SIZE 32 / M32 PEPPERS P/N: CR-1B/32/M32	COMMERCIAL	
24.00	3		CABLE GLAND - SIZE 25 / M25 PEPPERS P/N: CR-1B/25/M25	COMMERCIAL	
25.00	7		CABLE GLAND - SIZE 25 / M25 PEPPERS P/N: CR-1BR/25/M25	COMMERCIAL	
26.00	11		CABLE GLAND - SIZE 20 / M20 PEPPERS P/N: CR-1B/20/M20	COMMERCIAL	
27.00	1		CABLE GLAND - SIZE 20 / M20 PEPPERS P/N: CR-1BR/20/M20	COMMERCIAL	
28.00	26		CABLE GLAND - SIZE 20S / M20 PEPPERS P/N: CR-1B/20S/M20	COMMERCIAL	
29.00	4		CABLE GLAND - SIZE 16 / M20 PEPPERS P/N: CR-1B/16/M20	COMMERCIAL	
30.00	4		CABLE GLAND - SIZE 20 / 3/4"NPT PEPPERS P/N: CR-1BR/20/075NPT	COMMERCIAL	
31.00	2		CABLE GLAND - SIZE 20S / 1/2" NPT PEPPERS P/N: CR-1B/20S/050NPT	COMMERCIAL	
32.00	6		CABLE GLAND - SIZE 25 / 1"NPT PEPPERS P/N: A2LF/25/100NPT	COMMERCIAL	

OFFICIAL COPY - 01.17730.0038 - VDB004 - 1 - Approved(A) - - - 06-Jan-2010 06:03 PM

APPLETON MARINE, INC.

Code ID NO. 70433

PARTS LIST FOR:
ELECTRIC ASSEMBLY
AMD-2010
Customer: SBM OFFSHORE GROUP

S.O. NO. 15940
B.M. SERIES 4

Date Run: 10/14/2009
Prep'd By: KEG

ITEM	*QTY*	*PART NO.*	*DESCRIPTION*	*MAT'L / VENDER*	*WT(LBS)*
33.00	2		CABLE GLAND - SIZE 16 / 1/2"NPT PEPPERS P/N: CRIB/16//050NPT	COMMERCIAL	
34.00	2		CABLE GLAND - SIZE 16 / M20 PEPPERS P/N: A2LF/16/M20	COMMERCIAL	
35.00	8		REDUCING BUSHING - 1.25" NPT TO 1" NPT PEPPERS P/N: ARB/125NPT/100NPT	COMMERCIAL	
36.00	3		REDUCING BUSHING - M25 TO M20 PEPPERS P/N: ARB/M25/M20	COMMERCIAL	
37.00	100 FT		ELECTRIC CABLE - BFOU 0.6/1 KV 4X1.5MM^2 DRAKAMOG P/N: 800219	COMMERCIAL	
38.00	7		ELECTRIC FITTING, 1-1/2" NPT (.86-1.26) HUMMEL P/N: CD36NA-BK	COMMERCIAL	
39.00	13		ELECTRIC FITTING, 1" NPT (.71-.98) HUMMEL P/N: CD29NA-BK	COMMERCIAL	
40.00	6		ELECTRIC FITTING, 1" NPT (.51-.79) HUMMEL P/N: CD29NR-BK	COMMERCIAL	
41.00	6		ELECTRIC FITTING, 3/4" NPT (.51-.71) HUMMEL P/N: CD21NA-BK	COMMERCIAL	
42.00	10		ELECTRIC FITTING, 3/4" NPT (.35-.63) HUMMEL P/N: CD21NR-BK	COMMERCIAL	
43.00	13		ELECTRIC FITTING, 1/2" NPT (.24-.47) HUMMEL P/N: CD13NA-BK	COMMERCIAL	
44.00	1		ELECTRIC FITTING, 1/2" NPT (.28-.47) HUMMEL P/N: CD-16-NR-BK	COMMERCIAL	
45.00	1	YMD-10249	JUNCTION BOX (13 X 9 X 5)	COMMERCIAL	16
46.00	1		FLEXEBLE BRONZE COUPLING - 1" NPT 36" LG KILLARK P/N: EKJ-336	BRONZE	
47.00	2		SEALING FITTING - 1.0" NPT KILLARK P/N: ENY-3	ALUMINUM	
48.00	2		PIPE NIPPLE, 1" NPT 2" LG KILLARK P/N: AN-3B	ALUMINUM	

OFFICIAL COPY - 01.17730.0038 - VDB004 - 1 - Approved(A) - - - 06-Jan-2010 06:03 PM

APPLETON MARINE, INC.

Code ID NO. 70433

PARTS LIST FOR:
ELECTRIC ASSEMBLY
AMD-2010
Customer: SBM OFFSHORE GROUP

S.O. NO. 15940
B.M. SERIES 4

Date Run: 10/14/2009
Prep'd By: KEG

ITEM	*QTY*	*PART NO.*	*DESCRIPTION*	*MAT'L / VENDER*	*WT(LBS)*
49.00	4		REDUCING BUSHING - 1" TO 3/4" NPT KILLARK P/N: R-32	ALUMINUM	
50.00	2		REDUCING BUSHING - 3/4" TO 1/2" NPT	ALUMINUM	
51.00	2		PIPE NIPPLE, 1/2" NPT 2" LG KILLARK P/N: AN-1B	ALUMINUM	
52.00	1		PIPE NIPPLE, 1" NPT 6" LG	ALUMINUM	
53.00	2		MEYERS SCREW TYPE HUB - 1" NPT COOPER CROUSE-HINDS P/N: STA-3	ALUMINUM	
54.00	1		ELECTRIC FITTING, M20 (.24-.47) HUMMEL P/N: CD20MA-BK	COMMERCIAL	
55.00	3		ELECTRIC FITTING, 1" NPT (6 X .26") HUMMEL P/N: CD29N1-BK	COMMERCIAL	
56.00	2		PULLING ELBOW - ALUMINUM 3/4" NPT KILLARK P/N: CL-2	ALUMINUM	
57.00	2		PIPE NIPPLE, 0.75" NPT X 2" LG KILLARK P/N: AN-2B	ALUMINUM	
58.00	3	YMD-10736	BRAIDED GROUND STRAP, MAIN BOOM	COMMERCIAL	1
59.00	1	YMD-8736	ENCODER CABLE	COMMERCIAL	5
60.00	0		NOT USED		
61.00	0		NOT USED		
62.00	0		NOT USED		
63.00	2		MARINE BATTERY TERMINAL (POS) MCMASTER CARR #69645K58	COMMERCIAL	
64.00	2		MARINE BATTERY TERMINAL (NEG) MCMASTER CARR #69645K59	COMMERCIAL	

OFFICIAL COPY - 01.17730.0038 - VDB004 - 1 - Approved(A) - - - 06-Jan-2010 06:03 PM

APPLETON MARINE, INC.

Code ID NO. 70433

PARTS LIST FOR:
ELECTRIC ASSEMBLY
AMD-2010
Customer: SBM OFFSHORE GROUP

S.O. NO. 15940
B.M. SERIES 4

Date Run: 10/14/2009
Prep'd By: KEG

ITEM	*QTY*	*PART NO.*	*DESCRIPTION*	*MAT'L / VENDER*	*WT(LBS)*
65.00	16	YMD-5956	ELECTRIC CONNECTOR	COMMERCIAL	0
66.00	1		TYPE LB CONDUIT BODY, 0.75" NPT KILLARK P/N: OLB-2	ALUMINUM	
67.00	1		CLOSE ALUMINUM NIPPLE, .075" NPT KILLARK P/N: AN-2	ALUMINUM	
68.00	1		TYPE LB CONDUIT BODY, .5" NPT KILLARK P/N: OLB-1	ALUMINUM	
69.00	1		EXPLOSION PROOF TWO POSITION SWITCH PAULUHN P/N: EPCS2214A	ALUMINUM	
70.00	1		ETHERNET CABLE - 50 FT LENGTH MARSH ELECTRIC P/N: DC-5E8Q-50GRMB	COMMERCIAL	
71.00			NOT USED		
72.00	25 FT		ELECTRIC CABLE 7 CONDUCTOR, #14 AWG (.539" DIA) AMERCABLE P/N: 37-102-521	COMMERCIAL	
73.00	10 FT		1 AWG RED WELDING CABLE GREYBAR P/N: #1NEO/RED WELD	COMMERCIAL	
74.00	10 FT		1 AWG BLACK WELDING CABLE GREYBAR P/N: #1NEO/BLK WELD	COMMERCIAL	
75.00	3		CABLE LUG (GREEN 37) 3/8" HOLE T&B# 54148	COMMERCIAL	
76.00	1		CABLE LUG (GREEN 37) 1/2" HOLE T&B# 54155-TB	COMMERCIAL	
77.00	1		IDEAL ETHERNET END CRIMPER MARSH P/N:30-696	COMMERCIAL	
78.00	2		ETHERNET MALE RJ45 ENDS MARSH ELECTRONICS P/N: 32-5998UL	COMMERCIAL	
79.00	2		CABLE GLAND - SIZE 16 / M20 PEPPERS P/N: A2LF/16/M20	COMMERCIAL	
80.00	2	YMD-10909	CABLE TAGS	COMMERCIAL	1

OFFICIAL COPY - 01.17730.0038 - VDB004 - 1 - Approved(A) - - - 06-Jan-2010 06:03 PM

APPLETON MARINE, INC.

Code ID NO. 70433

PARTS LIST FOR:
ELECTRIC ASSEMBLY
AMD-2010
Customer: SBM OFFSHORE GROUP

S.O. NO. 15940
B.M. SERIES 4

Date Run: 10/14/2009
Prep'd By: KEG

ITEM	*QTY*	*PART NO.*	*DESCRIPTION*	*MAT'L / VENDER*	*WT(LBS)*
81.00	5		CABLE GLAND - SIZE 32 / 1"NPT PEPPERS P/N: A2LF/32/100NPT	COMMERCIAL	
82.00	1		CABLE GLAND - SIZE 20S / M20 PEPPERS P/N: A2LF/20S/M20	COMMERCIAL	
83.00	2		ELECTRIC FITTING, 1-1/2" NPT (.79-1.02) HUMMEL P/N: CD36NR-BK	COMMERCIAL	
84.00	3		STOPPING PLUG - M20 PEPPERS P/N: SPMHN/M20	COMMERCIAL	
85.00	3		STOPPING PLUG - M25 PEPPERS P/N: SPMHN/M25	COMMERCIAL	
86.00	15 FT		ELECTRIC CABLE 4 CONDUCTOR 8 AWG (.72 DIA) AMERCABLE P/N: 37-102-409	COMMERCIAL	

OFFICIAL COPY - 01.17730.0038 - VDB004 - 1 - Approved(A) - - - 06-Jan-2010 06:03 PM

